Revision: 0.7.0 09/2022

AK3918AV100 Series Processors Specification

© 2022 Guangzhou Anyka Microelectronics Co., Ltd. All rights reserved.

Table of Contents

Table of Contents i
Contact Information iv
About This Manual v
1 Introduction 1-1
1.1 Features 1-2
1.2 Applications 1-3
1.3 Part Number Information 1-3
2 PIN Assignment 2-1
2.1 PIN Assignment for AK3918AV100N 2-1
2.2 PIN Assignment for AK3918AV100P/X 2-2
3 Pin Definitions 3-1
4 Electrical Specifications 4-1
4.1 Absolute Maximum Ratings 4-1
4.2 Recommended Operating Range 4-2
4.3 ESD Ratings 4-3
4.4 DC Electrical Characteristics 4-3
4.5 AC Electrical Characteristics 4-4
4.6 Analog Interface Characteristics 4-5
5 Package Information 5-1
6 Reflow Profile 6-1
7 Storage and Baking 7-1
8 System Control 8-1
8.1 Reset Module 8-1
8.1.1 Features 8-1
8.1.2 Power on Reset Timing 8-1
8.2 Clock Generation and Control 8-1
8.2.1 Overview 8-1
8.2.2 Features 8-1
8.3 Bootstrap Module 8-2
8.3.1 Overview 8-2
8.3.2 Features 8-2
8.3.3 Block Diagram 8-2
8.4 CPU Core 8-3
8.4.1 Overview 8-3
8.4.2 Features 8-4
8.5 Interrupt Module 8-4
8.5.1 Overview 8-4
8.5.2 Features 8-4
8.5.3 Architecture 8-4
8.5.3.1 Interrupt Priority 8-4
8.5.3.2 Interrupt Mask 8-4
8.6 Working Modes 8-5
8.6.1 Overview 8-5
8.6.2 Wake-up Control 8-5
8.6.2.1 Overview 8-5
8.6.2.2 Features 8-5
8.7 Timer/PWM 8-6
8.7.1 Overview 8-6
8.7.2 Features 8-6

Anyka Confidential For SAT Use Only

8.7.3 Functional Description 8-6
8.7.3.1 Working Mode 8-6
8.7.3.2 Predefined Value Setting 8-8
8.7.4 Pulse Width Modulation 8-8
8.8 RTC 8-8
8.8.1 Overview 8-8
8.8.2 Features 8-9
8.8.3 Block Diagram 8-9
8.8.3.1 On-chip LDO_RTC 8-9
8.8.3.2 BGR 8-9
8.9 Tsensor 8-9
8.9.1 Overview 8-9
8.9.2 Features 8-9
9 Memory 9-1
9.1 L2 Memory 9-1
9.1.1 L2 Buffer0 9-1
9.1.1.1 Overview 9-1
9.1.1.2 Features 9-1
9.1.1.3 Block Diagram 9-1
9.1.2 L2 Buffer1 9-2
9.1.2.1 Overview 9-2
9.1.2.2 Features 9-2
9.1.2.3 Block Diagram 9-2
9.2 RAM Controller 9-2
9.2.1 Overview 9-2
9.2.2 Features 9-2
9.3 Fast SPI (SPI0) 9-3
9.3.1 Overview 9-3
9.3.2 Features 9-3
10 Multimedia 10-1
10.1 Image Capture 10-1
10.1.1 Overview 10-1
10.1.2 Features 10-1
10.1.3 Block Diagram 10-1
10.2 ISP 10-2
10.2.1 Overview 10-2
10.2.2 Features 10-2
10.3 Pre-processor 10-2
10.3.1 Overview 10-2
10.3.2 Features 10-3
10.4 NPU 10-3
10.4.1 Overview 10-3
10.4.2 Features 10-3
10.5 Video Processor 10-4
10.5.1 Overview 10-4
10.5.2 Features 10-4
10.6 Encryption 10-4
10.6.1 Overview 10-4
10.6.2 Features 10-4
11 Analog 11-1
11.1 Overview 11-1

Anyka Confidential For SAT Use Only

11.2 Reference Voltage Generator 11-1
11.3 Audio Codec 11-1
11.3.1 Sigma-Delta ADC 11-2
11.3.2 Sigma-Delta DAC 11-2
11.4 SAR ADC 11-2
11.4.1 Battery Monitoring 11-3
11.4.2 AIN0 Channel and AIN1 Channels 11-3
12 Peripherals 12-1
12.1 I2S 12-1
12.1.1 Overview 12-1
12.1.2 Features 12-1
12.2 TWI 12-1
12.2.1 Overview 12-1
12.2.2 Features 12-1
12.3 UART 12-1
12.3.1 Overview 12-1
12.3.2 Features 12-1
12.4 SPI1/SPI2 Controller 12-2
12.4.1 Overview 12-2
12.4.2 Features 12-2
12.5 USB 12-4
12.5.1 Overview 12-4
12.5.2 Features 12-4
12.5.3 Functional Description 12-4
12.5.3.1 Packet 12-4
12.5.3.2 Transferring type 12-5
12.6 MMC/SD/SDIO 12-6
12.6.1 Overview 12-6
12.6.2 Features 12-6
12.7 Ethernet 12-6
12.7.1 Overview 12-6
12.7.2 Features 12-6
12.8 GPIO 12-7
12.8.1 Overview 12-7
12.8.2 Features 12-7
12.8.3 Functional Description 12-7
12.8.3.1 Interrupt Function 12-7
12.8.3.2 Wakeup Function 12-7
13 Device Characteristics 13-1

Anyka Confidential For SAT Use Only

The copyright shall be Reserved by Guangzhou Anyka Microelectronics Co., Ltd. (Shortly, “ANYKA”) and should be protected by related laws and regulations. Without the prior written consent of ANYKA, no person shall be allowed to reproduce, transmit, divulge, or use or permit other(s) to use the Document and its content.

All intellectual property rights involved in the Document and its content shall be Reserved by Guangzhou Anyka Microelectronics Co., Ltd. or its licensor(s), and shall not be infringed.

THE INFORMATION IS PROVIDED WITHOUT ANY EXPRESS OR IMPLIED WARRANTY OF ANY KIND, INCLUDING WITHOUT LIMITATION WARRANTIES OF MERCHANTABILITY, FITNESS FOR ANY PARTICULAR PURPOSES, OR NONINFRINGEMENT OF INTELLECTUAL PROPERTY RIGHTS OF ANY THIRD PARTY.

IN NO EVENT SHALL ANYKA BE LIABLE FOR ANY DIRECT OR INDIRECT DAMAGES WHATSOEVER ARISING FROM THE USE OR EXECUTION OF THIS DOCUMENT AND ITS CONTENT.

The Document and its content is provided “AS IS”. ANYKA may, but is not required to, make changes, corrections, modifications or improvements to this document, or to specifications, product descriptions, and plans described therein from time to time, without notice.

Contact Information

Guangzhou Anyka Microelectronics Co., Ltd.
Anyka H Building, No.107 Bowen Rd.,
Guangzhou, Guangdong 510555
P.R. China
Tel: (86)-20-3221 9000
Fax: (86)-20-3221 9258

Sales Hotline:
(86)-20-3221 9499

E-mail:
sales@anyka.com

Home Page:
http: //www. anyka.com

Anyka Confidential For SAT Use Only

About This Manual

This document is the electrical and mechanical specification data sheet for AK3918AV100 series processors. This specification contains a functional overview, mechanical data, package signal locations, electrical specifications (simulated), and bus functional waveforms.

Conventions

- *#Abc* is used to indicate a signal that is active when pulled low: for example, #Reset.
- *Logic level one* is a voltage that corresponds to Boolean true (1) state.
- *Logic level zero* is a voltage that corresponds to Boolean false (0) state.
- To *set* a bit or bits means to establish logic level one.
- To *clear* a bit or bits means to establish logic level zero.
- A *signal* is an electronic construct whose state conveys or changes in state convey information.
- A *pin* is an external physical connection. The same pin can be used to connect a number of signals.
- *Asserted* means that a discrete signal is in active logic state.
- *Negated* means that an asserted discrete signal changes logic state.
- LSB means *least significant bit* or *bits*, and MSB means *most significant bit* or *bits*. References to low and high bytes or words are spelled out.
- Numbers with ‘b are binary. Numbers with‘d are decimal. Numbers with ‘h or preceded by *0x* are hexadecimal.
- “-“ is used to indicate the cell is blank or reserved.

Definitions, Acronyms, and Abbreviations

Unless otherwise specified, all the acronyms and abbreviations used in this manual are defined hereunder.

ADC	Analog to Digital Converter
ADE	Customized Analog Delay Element
AHB	Advanced High-performance Bus
CMOS	Complimentary Metal-Oxide Semiconductor
CIS	CMOS Image Sensor
CNN	Convolutional Neural Networks
CRC	Cyclic Redundancy Check
DAC	Digital to Analog Converter
DDE	2-NAND gate Digital Delay Element
DDR	Double Data Rate
DMA	Direct Memory Access
DNN	Deep Neural Network
DTE	Data Terminal Equipment
DPI	Short for dots per inch
FIFO	First In First Out
GPIO	General Purpose Input/Output
I2S	Inter-IC Sound
JPEG	Joint Picture Expert Group
LSB	Least Significant Bit
MAC	Media Access Control
MDLU	Master Delay Line Unit
MMC	Multimedia Card

Anyka Confidential For SAT Use Only

MMU	Memory Management Unit
NPU	Netural-network Processing Unit
MSB	Most Significant Bit
ODT	On Die Terminator
PCM	Pulse Code Modulation
PGA	Programmable Gain Amplifier
PReLU	Parameteric Rectified Linear Unit
PWM	Pulse-Width Modulator
PLL	Phase Locked Loop
RAM	Random Access Memory
ROM	Read Only Memory
RTC	Real Time Clock
SD	Secure Digital
SDLU	Slave Delay Line Unit
SDIO	Secure Digital Input/Output
SDRAM	Synchronous Dynamic Random Access Memory
SPI	Serial Peripheral Interface
SRAM	Static Random Access Memory
TBD	To be determined
TWI	Two-wire Interface
UART	Universal Asynchronous Receiver/Transmitter
USB	Universal Serial Bus
XTAL	Crystal

Product Documentation

The following document(s) is (are) required for a complete description of the AK3918AV100 series processors and are necessary to design properly with the device.

- *AK3918AV100 Series Processors Programmer's Guide*
- AK3918AV100 应用须知 *(AK3918AV100 Application Notes)*
- *Secure Boot User Guide* (《安全启动使用指南》)

Document Revision History

The following table provides revision history for this release. This history includes technical content revisions only and not stylistic or grammatical changes.

VERSION	DESCRIPTION	DATE COMPLETED
0.1.0	Initial release	September, 2021
0.2.0	**1) Section 2** Updated the pin assignment of AK3918AV100N/P/X. **2) Section 3** Modified pin definitions according to the latest pin assignment. See Table 3-1 AK3918AV100 Series Processors Functional Pin Definition. **3) Section 4** Added electrical specifications of pin AVDD12_FE. See Table 4-1 AK3918AV100 Series Processors Absolute Maximum Ratings & Table 4-2 Recommended Operating Range. **4) Section 8.7**	November, 2021

Anyka Confidential For CAT Use Only

VERSION	DESCRIPTION	DATE COMPLETED
	Modified the wakeup sources for sleep mode. **5) Section 13** Updated Table 13-1 Characteristics of the AK3918AV100 Series Devices.	
0.3.0	**1) Section 1.1** Modified the information about DDR2. **2)Section 2&3&13** a. Replaced the mux-pin of GPIO0&GPIO1 with GPIO55&GPIO56 in AK3918AV100P and AK3918AV100X chip. b. Updated pin assignment of AK3918AV100N/P/X. **3) Section 3** Updated the information in Table 3-5 Driving Strength Setting Condition. **4) Section 12.1.2&12.3&12.4.2** Optimized overview and features in I2S and UART and SPI1/SPI2 controller module.	January, 2022
0.4.0	**1) Section 2.2** Updated PIN Assignment for AK3918AV100P/X. **2) Section 3** Updated the notes of Table 3-1 AK3918AV100 Series Processors Functional Pin Definition. **3) Section 4.1** Corrected the information in Table 4-1 AK3918AV100 Series Processors Absolute Maximum Ratings. **4) Section 13** Corrected the information in Table 13-1 Characteristics of the AK3918AV100 Series Devices.	February, 2022
0.5.0	**1) Section 1.1 & 4.2 & 9.2.2** Modified the CPU working frequency. **2) Section 13** Added the detailed description of SAR ADC.	February, 2022
0.6.0	**1) Section 3** a. Corrected AK3918AV100N definition of PIN 46 in Table 3-1. b. Corrected the Note description of Table 3-1. **2) Section 10.5.2** Added the encoding output resolution in Features part. **3) Section 8.1 & 8.5 & 8.8 & 11 & 12.5& 12.8** Optimized the description of Overview, Features and Functional Description parts in Reset, Interrupt, Timer/PWM, Analog, USB, and GPIO modules.	April, 2022
0.7.0	**1) Section 1** Updated Figure 1-1 AK3918AV100 Series Processors Functional Block Diagram. **2) Section 3** **Modified NOTE for GPIO[98] in** Table 3-1 AK3918AV100 Series Processors Functional Pin Definition. **3) Section 4.1**	September, 2022

Anyka Confidential For SAT Use Only

VERSION	DESCRIPTION	DATE COMPLETED
	Modified Table 4-1 AK3918AV100 Series Processors Absolute Maximum Ratings. **4) Section 8.1.2** Updated Figure 8-1 AK3918AV100 Series Processors Power on Reset Timing. **5) Section 8.3** Updated descriptions of bootstrap module and Figure 8-2 AK3918AV100 Series Processors Boot Flow.	

Anyka Confidential For SAT Use Only

1 Introduction

AK3918AV100 series processors are specially designed for Artificial Intelligence & Internet of Things Camera (AIoT Camera) applications, one of the key components of electronic surveillance system.

With the intelligent NPU (Neural-network Processing Unit), the optimized image signal processing algorithm and hardware H.265/H.264 encoder, AK3918AV100 series processors provide an enhanced object detection/tracking and face detection/recognition ability with high quality pictures and low bit rate video encoding at minimal power consumption. It also supports security boot for a better security level. A set of peripheral interfaces, such as UART, SPI, MMC/SD/SDIO and USB2.0, feature AK3918AV100 series processors with high extensibility and high flexibility. Meanwhile, the integrated Fast Ethernet PHY transceiver can reduce the cost of bill-of-materials (BOM) of the final products.

Product Development Kit, including hardware development kit (HDK), software development kit (SDK) and tools, is available for customers to develop in a most convenient way.

AK3918AV100 series processors functional block diagram is shown as follows.

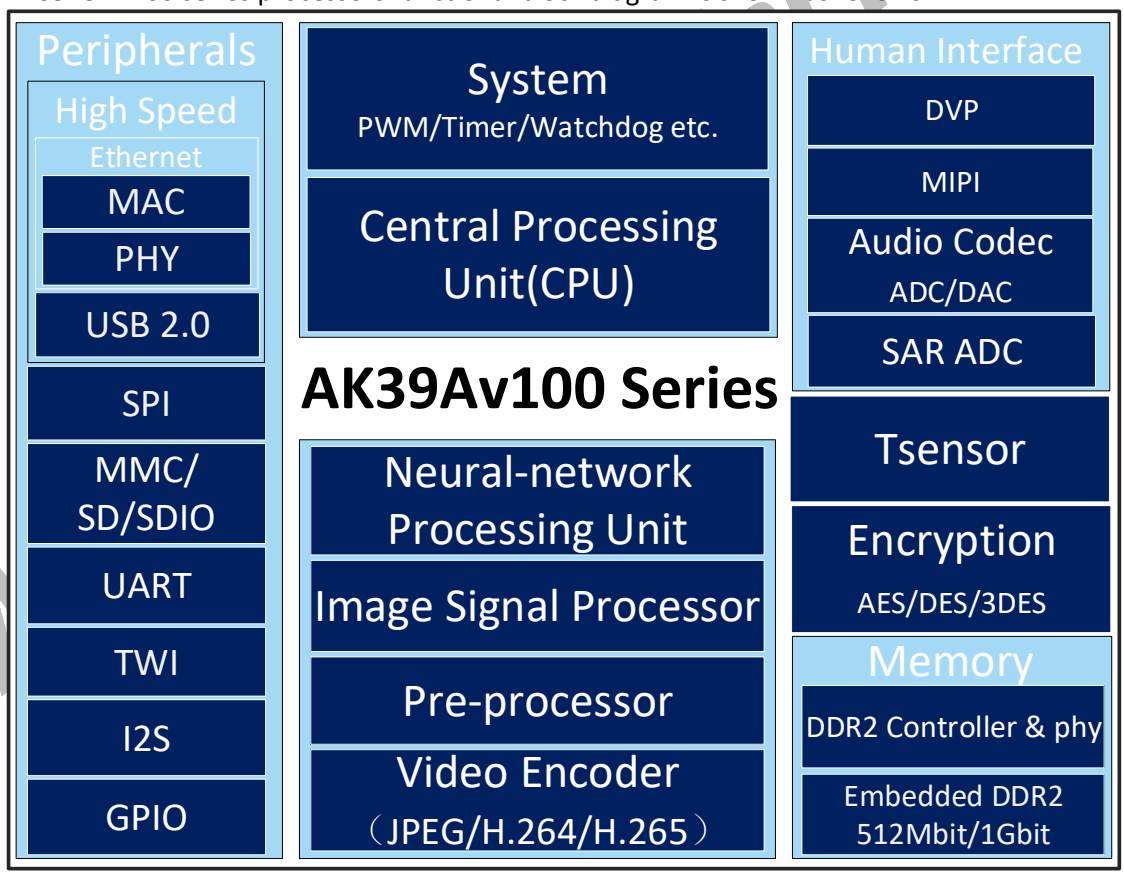

Figure 1-1 AK3918AV100 Series Processors Functional Block Diagram

1.1 Features

- ARM926EJ-S core
- 900MHz CPU working frequency
- Supports little endian only
- Neural-network Processing Unit (NPU) supports object detection/tracking and face detection/recognition
- BT.601/BT.656/BT.1120 CMOS Image Sensor interfaces with programmable image size and smart scaling capability
- Video Processor, supporting H.264/H.265/MJPEG/JPEG encoding
- 1 Sigma-Delta ADC(16-bit) with built-in microphone pre-amplifier
- 1 Sigma-Delta DAC(22-bit) with headphone driver
- 1 SAR ADC(12-bit) for analog keypad and general analog-to-digital conversion
- Stacked 1Gbit DDR2 SDRAM
- 1 Fast SPI Controller(SPI0)
  - Specially integrated for SPI NOR Flash or SPI NAND Flash
  - Up to 100MHz working frequency
- Supports Normal boot and Security boot
  - Serial NOR Flash Boot
  - SPI NAND Flash Boot
  - eMMC Boot
  - USB Mass Storage Boot
  - UART Boot
- Security engine supports AES/DES/3DES
- Tsensor for chip temperature monitoring
- Flexible clock sources
- 32.768KHz RTC
- Internal 32KHz RC oscillator
- Up to 5 PWMs
- 10 General Purpose timers
- 1 watchdog timer
- 3 UARTs (one with hardware flow control)
- 2 general SPI interfaces (SPI1 & SPI2), supporting master & slave mode
- 1 I2S master & slave interface
- 3 TWI master & slave interfaces, compatible with SCCB protocol
- 3 MMC/SD/SDIO controllers, each controller supporting:
  - MMC interface, version 4.2
  - SD interface, version 2.0
  - SDIO interface, version 2.0
- USB 2.0 HS Host/Slave controller
- Ethernet
  - 10/100Mbps full-duplex/half-duplex mode
  - Compliant with IEEE 802.3az-2010 (EEE)/10Base-T IEEE 802.3/ 100Base-TX IEEE 802.3u
  - Supports Auto-Negotiation/ Auto-MDIX
- Up to 59 GPIOs (3 dedicated and 56 shared pins)
- Package: 88-pin QFN

Anyka Confidential For SAT Use Only

1.2 Applications

- Artificial Intelligence & Internet of Things Camera (AIoT Camera)

1.3 Part Number Information

As shown in Figure 1-2, the Part Number information consists of three lines. The first line symbolizes ANYKA, the second line indicates the product ID, and the third line is the production lot number plus the secondary model number, the former of which is reserved by the producer for specific purposes.

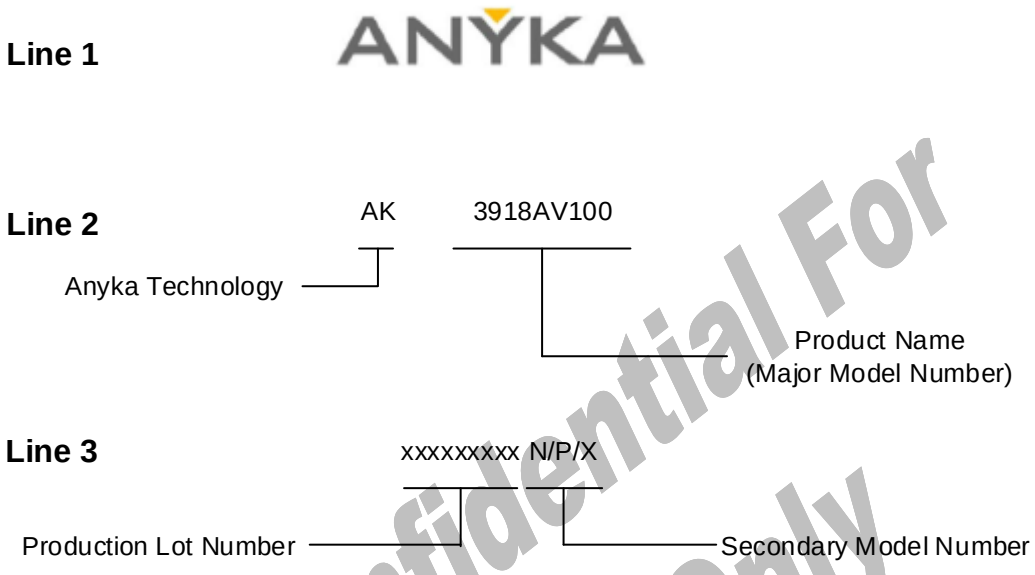

Figure 1-2 Part Number Information

Anyka Confidential For SAT Use Only

2 PIN Assignment

AK3918AV100 series includes three packages: AK3918AV100N, AK3918AV100P and AK3918AV100X, the latter two of which have the same pin assignment and only differ in DDR2 capacity.

2.1 PIN Assignment for AK3918AV100N

Figure 2-1 AK3918AV100N PIN Assignment

Anyka Confidential For SAT Use Only

2.2 PIN Assignment for AK3918AV100P/X

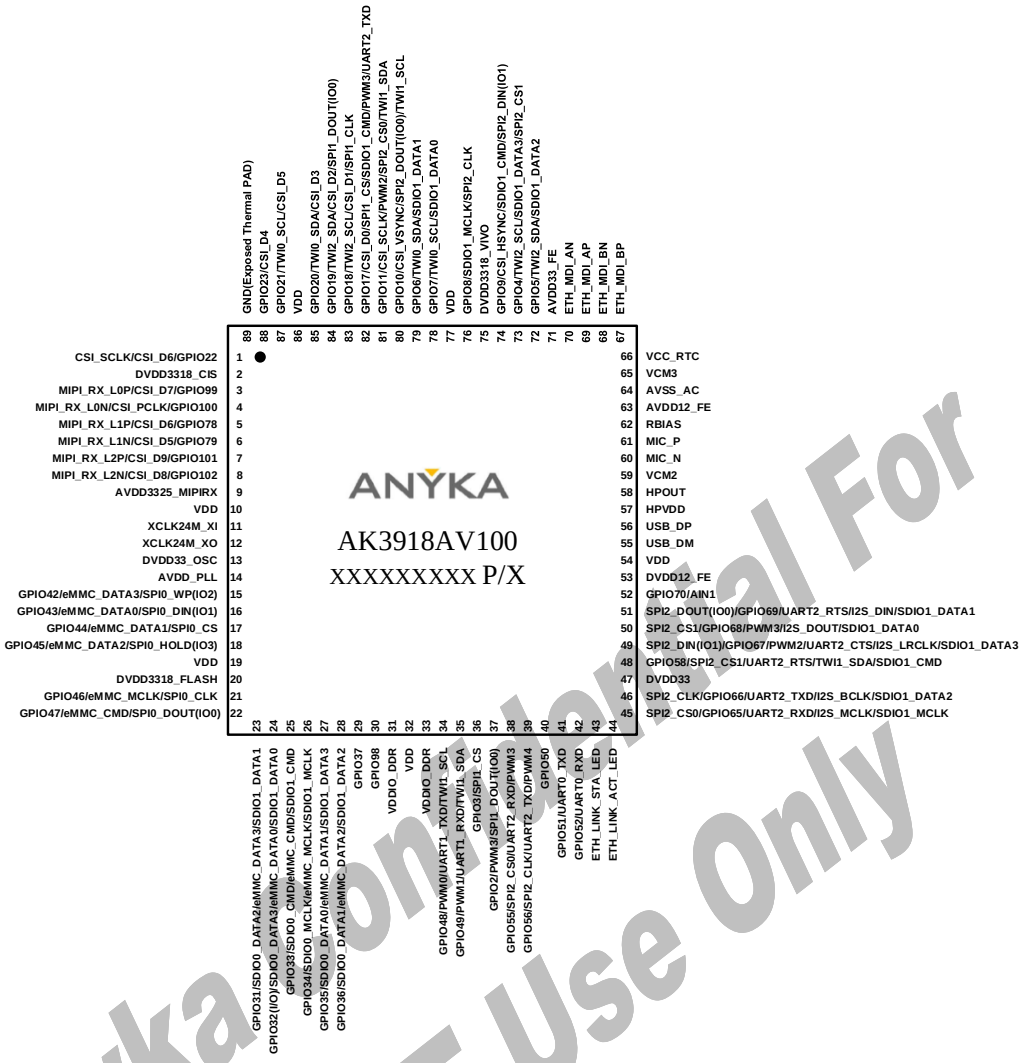

Anyka Internal For SAT Use Only

Figure 2-2 AK3918AV100P/X PIN Assignment

3 Pin Definitions

Table 3-1 identifies and describes AK3918AV100 series processors signals that are assigned to package pins. Some pins are exclusive to AK3918AV100N and others are to AK3918AV100P/X. For more, see NOTE in Table 3-1.
I: input; O: output; IO: input/output; PWR: power supply; GND: ground; A: analog; D: digital.
PU: pull-up; PD: pull-down; Z: high impedance state; WU: wakeup

Seventeen power domains are provided for I/O application. Detailed definitions are as follows:

- VCC_RTC: Power supply for RTC
- AVDD_PLL: Power supply for PLL
- DVDD33: 3.3V power supply for general I/O application
- DVDD33_OSC: Power supply for 24MHz oscillator
- DVDD3318_VIVO: Power supply for CSI and general I/O application
- AVDD33_FE: 3.3V analog power supply for Fast Ethernet PHY
- DVDD12_FE: 1.2V digital power output
- AVDD12_FE: 1.2V analog power output
- DVDD3318_CIS: Power supply for CMOS image sensor
- VDD: Digital power supply
- AVDD3325_MIPIRX: 2.5V/3.3V analog power supply for MIPIRX
- AVSS_AC: Analog ground for Audio Codec
- VCM2: Reference voltage output for Audio modules
- HPVDD: 3.3V power supply for Audio Codec and USB
- DVDD3318_FLASH: I/O power supply for Flash
- VDDIO_DDR: I/O power supply for DDR2
- VREF_DDR: Reference voltage input for DDR2

Anyka Confidential For SAT Use Only

Table 3-1 AK3918AV100 Series Processors Functional Pin Definition

PIN NUMBER OF AK3918AV100N	PIN NUMBER OF AK3918AV100P/X	PIN NAME	TYPE	POWER DOMAIN	RESET	PIN MUX	DESCRIPTION	NOTE
1	1	CSI_SCLK/ CSI_D6/ GPIO22	IO/D	DVDD3318_CIS	I/PU, GPIO22	CSI_SCLK	Main clock for camera, programmable	-
						CSI_D6	Camera pixel data input	
						GPIO22	General purpose input/output port	
2	2	DVDD3318_CIS	PWR	DVDD3318_CIS	-	-	Power supply for CMOS sensor	-
3	3	MIPI_RX_L0P/ CSI_D7/ GPIO99/	IO/D	AVDD3325_MIPIRX/ DVDD3318_CIS SEE **NOTE** 1 for details.	I/Z MIPI_RX_ L0P	MIPI_RX_ L0P	MIPI lane 0 (positive)	Please refer to **NOTE** 1 for details.
						CSI_D7	Camera pixel data input.	-
						GPIO99	General purpose input/output port	-
4	4	MIPI_RX_L0N/ CSI_PCLK/ GPIO100	IO/D	AVDD3325_MIPIRX/ DVDD3318_CIS SEE **NOTE** 1 for details.	I/Z MIPI_RX_L0N	MIPI_RX_L0N	MIPI lane 0 (negative)	Please refer to **NOTE** 1 for details.
						CSI_PCLK	Pixel clock from camera	-
						GPIO100	General purpose input/output port	-
5	5	MIPI_RX_L1P/ CSI_D6/ GPIO78	IO/D	AVDD3325_MIPIRX/ DVDD3318_CIS SEE **NOTE** 1 for details.	I/Z MIPI_RX_L1P	MIPI_RX_L1P	MIPI lane 1 (positive)	Please refer to **NOTE** 1 for details.
						CSI_D6	Camera pixel data input	-
						GPIO78	General purpose input/output port	-
6	6	MIPI_RX_L1N/ CSI_D5/ GPIO79	IO/D	AVDD3325_MIPIRX/ DVDD3318_CIS SEE **NOTE** 1 for details.	I/Z MIPI_RX_L1N	MIPI_RX_L1N	MIPI lane 1 (negative)	Please refer to **NOTE** 1 for details.
						CSI_D5	Camera pixel data input	-
						GPIO79	General purpose input/output port	-
7	7	MIPI_RX_L2P/ CSI_D9/ GPIO101	IO/D	AVDD3325_MIPIRX/ DVDD3318_CIS SEE **NOTE** 1 for details.	I/Z MIPI_RX_L2P	MIPI_RX_L2P	MIPI lane 2 (positive)	Please refer to **NOTE** 1 for details.
						CSI_D9	Camera pixel data input	-
						GPIO101	General purpose input/output port	-
8	8	MIPI_RX_L2N/ CSI_D8/ GPIO102	IO/D	AVDD3325_MIPIRX/ DVDD3318_CIS SEE **NOTE** 1 for details.	I/Z MIPI_RX_L2N	MIPI_RX_L2N	MIPI lane 2 (negative)	Please refer to **NOTE** 1 for details.
						CSI_D8	Camera pixel data input.	-
						GPIO102	General purpose input/output port	-

Anyka Confidential For SAT Use Only

PIN NUMBER OF AK3918AV100N	PIN NUMBER OF AK3918AV100P/X	PIN NAME	TYPE	POWER DOMAIN	RESET	PIN MUX	DESCRIPTION	NOTE
9	9	AVDD3325_MIPIRX	PWR	AVDD3325_MIPIRX	-	-	3.3V/2.5V Analog power supply for MIPIRX	-
10	10	VDD	PWR	VDD	-	-	Digital power supply	-
11	11	XCLK24M_XI	IO	DVDD33_OSC	-	-	External 24MHz crystal input/output	-
12	12	XCLK24M_XO	IO	DVDD33_OSC	-	-	External 24MHz crystal input/output	-
13	13	DVDD33_OSC	PWR	DVDD33_OSC	-	-	Power supply for 24MHz oscillator	-
14	14	AVDD_PLL	PWR	AVDD_PLL	-	-	Power supply for PLL	-
15	15	GPIO42/ eMMC_DATA3/ SPI0_WP(IO2)	IO/D	DVDD3318_FLASH	I/PU, GPIO42	GPIO42	General purpose input/output port	-
						eMMC_DATA3	MMC/SD/SDIO serial data line	
						SPI0_WP(IO2)	Fast SPI0 write protect (serial data input/output 2)	
16	16	GPIO43/ eMMC_DATA0/ SPI0_DIN(IO1)	IO/D	DVDD3318_FLASH	I/PU, GPIO43	GPIO43	General purpose input/output port	-
						eMMC_DATA0	MMC/SD/SDIO serial data line	
						SPI0_DIN(IO1)	Fast SPI0 data input (serial data input/output 1)	
17	17	GPIO44/ eMMC_DATA1/ SPI0_CS	IO/D	DVDD3318_FLASH	I/PU, GPIO44	GPIO44	General purpose input/output port	-
						eMMC_DATA1	MMC/SD/SDIO serial data line	
						SPI0_CS	Fast SPI0 chip selection	
18	18	GPIO45/ eMMC_DATA2/ SPI0_HOLD(IO3)	IO/D	DVDD3318_FLASH	I/PU, GPIO45	GPIO45	General purpose input/output port	-
						eMMC_DATA2	MMC/SD/SDIO serial data line	
						SPI0_HOLD(IO3)	Fast SPI0 hold (serial data input/output 3)	
19	19	VDD	PWR	VDD	-	-	Digital power supply	-
20	20	DVDD3318_FLASH	PWR	DVDD3318_FLASH	-	-	I/O power supply for Flash	-

Anyka Confidential For SAT Use Only

PIN NUMBER OF AK3918AV100N	PIN NUMBER OF AK3918AV100P/X	PIN NAME	TYPE	POWER DOMAIN	RESET	PIN MUX	DESCRIPTION	NOTE
21	21	GPIO46/ eMMC_MCLK/ SPI0_CLK	IO/D	DVDD3318_FLASH	I/PU, GPIO46	GPIO46	General purpose input/output port	-
						eMMC_MCLK	MMC/SD/SDIO operating clock	
						SPI0_CLK	Fast SPI0 clock	
22	22	GPIO47/ eMMC_CMD/ SPI0_DOUT(IO0)	IO/D	DVDD3318_FLASH	I/PU, GPIO47	GPIO47	General purpose input/output port	-
						eMMC_CMD	MMC/SD/SDIO command line	
						SPI0_DOUT(IO0)	Fast SPI0 data output (serial data input/output 0)	
23	23	GPIO31/ SDIO0_DATA2/ eMMC_DATA3/ SDIO1_DATA1	IO/D	DVDD3318_FLASH	I/PU, GPIO31	GPIO31	General purpose input/output port	-
						SDIO0_DATA2	MMC/SD/SDIO serial data line	
						eMMC_DATA3	MMC/SD/SDIO serial data line	
						SDIO1_DATA1	MMC/SD/SDIO serial data line	
24	24	GPIO32/ SDIO0_DATA3/ eMMC_DATA0/ SDIO1_DATA0	IO/D	DVDD3318_FLASH	I/PU, GPIO32	GPIO32	General purpose input/output port	-
						SDIO0_DATA3	MMC/SD/SDIO serial data line.	**NOTE:** This pin supports SD card plug-in/off detection.
						eMMC_DATA0	MMC/SD/SDIO serial data line	-
						SDIO1_DATA0	MMC/SD/SDIO serial data line	-
25	25	GPIO33/ SDIO0_CMD/ eMMC_CMD/ SDIO1_CMD	IO/D	DVDD3318_FLASH	I/PU, GPIO33	GPIO33	General purpose input/output port	-
						SDIO0_CMD	MMC/SD/SDIO command line	
						eMMC_CMD	MMC/SD/SDIO command line	
						SDIO1_CMD	MMC/SD/SDIO command line	
26	26	GPIO34/ SDIO0_MCLK/ eMMC_MCLK/ SDIO1_MCLK	IO/D	DVDD3318_FLASH	I/PD, GPIO34	GPIO34	General purpose input/output port	-
						SDIO0_MCLK	MMC/SD/SDIO operating clock	
						eMMC_MCLK	MMC/SD/SDIO operating clock	
						SDIO1_MCLK	MMC/SD/SDIO operating clock	
27	27	GPIO35/ SDIO0_DATA0/ eMMC_DATA1/ SDIO1_DATA3	IO/D	DVDD3318_FLASH	I/PU, GPIO35	GPIO35	General purpose input/output port	-
						SDIO0_DATA0	MMC/SD/SDIO serial data line	-
						eMMC_DATA1	MMC/SD/SDIO serial data line	-
						SDIO1_DATA3	MMC/SD/SDIO serial data line	**NOTE:** This pin supports SD card plug-in/off detection.

Anyka Confidential For SAT Use Only

PIN NUMBER OF AK3918AV100N	PIN NUMBER OF AK3918AV100P/X	PIN NAME	TYPE	POWER DOMAIN	RESET	PIN MUX	DESCRIPTION	NOTE
28	28	GPIO36/ SDIO0_DATA1/ eMMC_DATA2/ SDIO1_DATA2	IO/D	DVDD3318_FLASH	I/PU, GPIO36	GPIO36	General purpose input/output port	-
						SDIO0_DATA1	MMC/SD/SDIO serial data line	
						eMMC_DATA2	MMC/SD/SDIO serial data line	
						SDIO1_DATA2	MMC/SD/SDIO serial data line	
29	29	GPIO37	IO/D	DVDD3318_FLASH	I/PD, GPIO37	-	General purpose input/output port	-
30	30	GPIO98	IO/D	DVDD3318_FLASH	I/PU, GPIO98	-	General purpose input/output port	**NOTE: GPIO98 can be used to reset external connected devices when AK3918AV100 processor is powered on. It should be NOTED that at the start-up of AK3918AV100 processor, this pin will output low level signal for 50us and then generate high level signal for 300us before returning to the default state, namely "input+ pull-up" state.**
31	31	VDDIO_DDR	PWR	VDDIO_DDR	-	-	Power supply for DDR2	-
32	32	VDD	PWR	VDD	-	-	Digital power supply	-
33	33	VDDIO_DDR	PWR	VDDIO_DDR	-	-	Power supply for DDR2	-
34	34	GPIO48/ PWM0/ UART1_TXD/ TWI1_SCL	IO/D	DVDD33	I/PU, GPIO48	GPIO48	General purpose input/output port	-
						PWM0	PWM0 output	
						UART1_TXD	UART1 transmit pin	
						TWI1_SCL	TWI1 serial clock	
35	35	GPIO49/ PWM1/ UART1_RXD/ TWI1_SDA	IO/D	DVDD33	I/PU, GPIO49	GPIO49	General purpose input/output port	-
						PWM1	PWM1 output	
						UART1_RXD	UART1 receive pin	
						TWI1_SDA	TWI1 serial data	
36	36	GPIO3/	IO/D	DVDD33	I/PU,	GPIO3	General purpose input/output port	-

Anyka Confidential For SAT Use Only

PIN NUMBER OF AK3918AV100N	PIN NUMBER OF AK3918AV100P/X	PIN NAME	TYPE	POWER DOMAIN	RESET	PIN MUX	DESCRIPTION	NOTE
		SPI1_CS/ RMII_MDIO			GPIO3	SPI1_CS	SPI1 chip selection	-
						RMII_MDIO	RMII management data I/O	**AK3918AV100P/X integrates a Fast Ethernet PHY transceiver and thus needs no more external PHY processors.**
37	37	GPIO2/ PWM3/ SPI1_DOUT(IO0)/ RMII_RXDV	IO/D	DVDD33	I/PD, GPIO2	GPIO2	General purpose input/output port	-
						PWM3	PWM3 output	-
						SPI1_DOUT(IO0)	SPI1 data output (serial data input/output 0)	-
						RMII_RXDV	RMII contains Carrier Sense and Receives Data valid signal, input from the external Ethernet PHY.	**AK3918AV100P/X integrates a Fast Ethernet PHY transceiver and thus needs no more external PHY processors.**
38	-	GPIO1/ UART1_RXD/ SPI1_DIN(IO1)/ RMII_RXER	IO/D	DVDD33	I/PU, GPIO1	GPIO1	General purpose input/output port	**NOTE: AK3918AV100P/X does NOT support this pin. (AK3918AV100P/X does not support SPI1 function)**
						UART1_RXD	UART1 receive pin	
						SPI1_DIN(IO1)	SPI1 data input (serial data input/output 1)	
						RMII_RXER	RMII receive error	
39	-	GPIO0/ UART1_TXD/ SPI1_CLK/ OPCLK1	IO/D	DVDD33	I/PU, GPIO0	GPIO0	General purpose input/output port	**NOTE:** 1) **AK3918AV100P/X does NOT support this pin. (AK3918AV100P/X does not support SPI1 function)** 2) When MAC operating clock is generated from internal PLL, then OPCLK will output 50MHz clock, frequency unchangeable.
						UART1_TXD	UART1 transmit pin	
						SPI1_CLK	SPI1 clock	
						OPCLK1	Programmable clock output 1.	
40	38	GPIO55/ SPI2_CS0/ UART2_RXD/ PWM3	IO/D	DVDD33	I/PU, GPIO55	GPIO55	General purpose input/output port	
						SPI2_CS0	SPI2 chip selection 0	
						UART2_RXD	UART2 receive pin	
						PWM3	PWM3 output	

Anyka Confidential For SAT Use Only

PIN NUMBER OF AK3918AV100N	PIN NUMBER OF AK3918AV100P/X	PIN NAME	TYPE	POWER DOMAIN	RESET	PIN MUX	DESCRIPTION	NOTE
41	39	GPIO56/ SPI2_CLK/ UART2_TXD/ PWM4	IO/D	DVDD33	I/PU, GPIO56	GPIO56	General purpose input/output port	
						SPI2_CLK	SPI2 clock	
						UART2_TXD	UART2 transmit pin	
						PWM4	PWM4 output	
42	40	GPIO50	IO/D	DVDD33	I/PU, GPIO50	-	General purpose input/output port	-
43	41	GPIO51/ UART0_TXD	IO/D	DVDD33	I/PU, GPIO51	GPIO51	General purpose input/output port	-
						UART0_TXD	UART0 transmit pin	
44	42	GPIO52/ UART0_RXD	IO/D	DVDD33	I/PU, GPIO52	GPIO52	General purpose input/output port	-
						UART0_RXD	UART0 receive pin	
45	-	GPIO24/ SPI1_CS/ SDIO1_DATA1	IO/D	DVDD33	I/PU, GPIO24	GPIO24	General purpose input/output port	**NOTE: AK3918AV100P/X does NOT support this pin.**
						SPI1_CS	SPI1 chip selection	
						SDIO1_DATA1	MMC/SD/SDIO data line	
46	-	GPIO25/ SPI1_CLK/ SDIO1_DATA0	IO/D	DVDD33	I/PU, GPIO25	GPIO25	General purpose input/output port	**NOTE: AK3918AV100P/X does NOT support this pin.**
						SPI1_CLK	SPI1 clock	
						SDIO1_DATA0	MMC/SD/SDIO data line	
47	-	GPIO27/ SPI1_DIN(IO1)/ SDIO1_MCLK/ PWM1	IO/D	DVDD33	I/PU, GPIO27	GPIO27	General purpose input/output port	**NOTE: AK3918AV100P/X does NOT support this pin.**
						SPI1_DIN(IO1)	SPI1 data input(serial data input/output 1)	
						SDIO1_MCLK	MMC/SD/SDIO operating clock	
						PWM1	PWM1 output	
-	43	ETH_LINK_STA_LED	O/D	DVDD33	-	-	Fast Ethernet PHY network connection indicator	**NOTE: AK3918AV100N does NOT support this pin.**
-	44	ETH_LINK_ACT_LED	O/D	DVDD33	-	-	Fast Ethernet PHY network data exchange indicator	**NOTE: AK3918AV100N does NOT support this pin.**
48	45	SPI2_CS0/	IO/D	DVDD33	I/PD,	SPI2_CS0	SPI2 chip selection	-

Anyka Confidential For SAT Use Only

PIN NUMBER OF AK3918AV100N	PIN NUMBER OF AK3918AV100P/X	PIN NAME	TYPE	POWER DOMAIN	RESET	PIN MUX	DESCRIPTION	NOTE
		GPIO65/ UART2_RXD/ I2S_MCLK/ SDIO1_MCLK			GPIO65	GPIO65	General purpose input/output port	
						UART2_RXD	UART2 receive pin	
						I2S_MCLK	I2S main clock	
						SDIO1_MCLK	MMC/SD/SDIO operating clock	
49	46	SPI2_CLK/ GPIO66/ UART2_TXD/ I2S_BCLK/ SDIO1_DATA2	IO/D	DVDD33	I/PD, GPIO66	SPI2_CLK	SPI2 clock	-
						GPIO66	General purpose input/output port	
						UART2_TXD	UART2 transmit pin	
						I2S_BCLK	I2S bit clock	
						SDIO1_DATA2	MMC/SD/SDIO data line	
50	47	DVDD33	PWR	DVDD33	-	-	3.3V power supply for general I/O application	-
51	-	GPIO26/ SPI1_DOUT(IO0)/ SDIO1_CMD	IO/D	DVDD33	I/PU, GPIO26	GPIO26	General purpose input/output port	**NOTE: AK3918AV100P/X does NOT support this pin.**
						SPI1_DOUT(IO0)	SPI1 data output(serial data input/output 0)	
						SDIO1_CMD	MMC/SD/SDIO command line	
52	48	GPIO58/ SPI2_CS1/ UART2_RTS/ TWI1_SDA/ SDIO1_CMD	IO/D	DVDD33	I/PU, GPIO58	GPIO58	General purpose input/output port	-
						SPI2_CS1	SPI2 chip selection 1	
						UART2_RTS	UART2 ready to send signal	
						TWI1_SDA	TWI1 serial data	
						SDIO1_CMD	MMC/SD/SDIO command line	
53	49	SPI2_DIN(IO1)/ GPIO67/ PWM2/ UART2_CTS/ I2S_ LRCLK/ SDIO1_DATA3	IO/D	DVDD33	I/PU, GPIO67	SPI2_DIN(IO1)	SPI2 data input (serial data input/output 1)	-
						GPIO67	General purpose input/output port	-
						PWM2	PWM2 output	-
						UART2_CTS	UART2 clear to send signal	-
						I2S_ LRCLK	I2S channel selection	-
						SDIO1_DATA3	MMC/SD/SDIO serial data line	**NOTE**: This pin supports SD card plug-in/off detection.

Anyka Confidential For SAT Use Only

PIN NUMBER OF AK3918AV100N	PIN NUMBER OF AK3918AV100P/X	PIN NAME	TYPE	POWER DOMAIN	RESET	PIN MUX	DESCRIPTION	NOTE
54	50	SPI2_CS1/ GPIO68/ PWM3/ I2S_DOUT/ SDIO1_DATA0	IO/D	DVDD33	I/PU, GPIO68	SPI2_CS1	SPI2 chip selection 1	-
						GPIO68	General purpose input/output port	
						PWM3	PWM3 output	
						I2S_DOUT	I2S data output	
						SDIO1_DATA0	MMC/SD/SDIO serial data line	
55	51	SPI2_DOUT(IO0)/ GPIO69/ UART2_RTS/ I2S_DIN/ SDIO1_DATA1	IO/D	DVDD33	I/PD, GPIO69	SPI2_DOUT(IO0)	SPI2 data output(serial data input/output 0)	-
						GPIO69	General purpose input/output port	
						UART2_RTS	UART2 ready to send signal	
						I2S_DIN	I2S data input	
						SDIO1_DATA1	MMC/SD/SDIO serial data line	
56	52	GPIO70/ AIN1	IO/D	DVDD33	I/PD, GPIO70	GPIO70	General purpose input/output port	-
						AIN1	AIN1 is a channel of SAR ADC for analog keypad input.	
57	-	GPIO71/ AIN0	IO/D	DVDD33	I/PD, GPIO71	GPIO71	General purpose input/output port	**NOTE: AK3918AV100P/X does NOT support this pin.**
						AIN0	AIN0 is a channel of SAR ADC for analog keypad input.	
-	53	DVDD12_FE	PWR	DVDD12_FE	-	-	1.2V digital power output **NOTE**: Be sure to connect to a 0.1uF ceramic capacitor and then to GND.	**NOTE**: **AK3918AV100N does NOT support this pin.**
58	54	VDD	PWR	VDD	-	-	Digital power supply	-
59	55	USB_DM	A	HPVDD	-	-	USB data minus pin (D-)	-
60	56	USB_DP	A	HPVDD	-	-	USB data plus pin (D+)	-
61	57	HPVDD	PWR	HPVDD	-	-	3.3V power supply for Audio Codec and USB	-
62	58	HPOUT	O/A	HPVDD	-	-	Headphone audio output	-
63	59	VCM2	PWR	HPVDD		-	Reference voltage output for Audio modules.	**NOTE**: It is recommended to connect to a 4.7μF capacitor between this pin and GND.
64	60	MIC_N	I/A	HPVDD	-	-	Microphone input (negative)	-

Anyka Confidential For SAT Use Only

PIN NUMBER OF AK3918AV100N	PIN NUMBER OF AK3918AV100P/X	PIN NAME	TYPE	POWER DOMAIN	RESET	PIN MUX	DESCRIPTION	NOTE
65	61	MIC_P	I/A	HPVDD	-	-	Microphone input (positive)	-
-	62	RBIAS	I/D	DVDD33	-	-	Transmit Bias Resistor Connection. **NOTE**: A 2.49KΩ±1% resistor should be connected from RBIAS to GND.	**NOTE**: **AK3918AV100N does NOT support this pin.**
-	63	AVDD12_FE	PWR	AVDD12_FE	-	-	1.2V analog power output **NOTE:** Be sure to connect to a 1uF +0.1uF ceramic capacitor and then to GND.	**NOTE**: **AK3918AV100N does NOT support this pin.**
66	64	AVSS_AC	GND	AVSS_AC	-	-	Analog ground for Audio Codec	-
67	65	VCM3	PWR	HPVDD	-	-	3.0V output	**NOTE:** To filter out noise, it is recommended to connect to a 4.7µF/10µF capacitor plus a 0.1µF capacitor in parallel between this pin and GND.
68	-	XCLK32KI	I/A	VCC_RTC	-	-	External 32 KHz crystal input	**NOTE: AK3918AV100P/X does NOT support this pin.**
69	-	XCLK32KO	O/A	VCC_RTC	-	-	External 32 KHz crystal output	**NOTE: AK3918AV100P/X does NOT support this pin.**
70	66	VCC _RTC	PWR	VCC _RTC	-	-	Power supply for RTC module	-
-	67	ETH_MDI_BP	IO/A	AVDD33_FE	-	-	Channel B(positive) of Fast Ethernet PHY	**NOTE: AK3918AV100N does NOT support this pin.**
-	68	ETH_MDI_BN	IO/A	AVDD33_FE	-	-	Channel B(negative) of Fast Ethernet PHY	**NOTE: AK3918AV100N does NOT support this pin.**
-	69	ETH_MDI_AP	IO/A	AVDD33_FE	-	-	Channel A(positive) of Fast Ethernet PHY	**NOTE: AK3918AV100N does NOT support this pin.**
-	70	ETH_MDI_AN	IO/A	AVDD33_FE	-	-	Channel A(negative) of Fast Ethernet PHY	**NOTE: AK3918AV100N does NOT support this pin.**
-	71	AVDD33_FE	PWR	AVDD33_FE	-	-	3.3V analog power supply for Fast Ethernet PHY	**NOTE: AK3918AV100N does NOT support this pin.**
71	72	GPIO5/ TWI2_SDA/ SDIO1_DATA2/ RMII_MDC	IO/D	DVDD3318_VIVO	I/PU, GPIO5	GPIO5	General purpose input/output port	-
						TWI2_SDA	TWI2 serial data	-
						SDIO1_DATA2	MMC/SD/SDIO serial data line	-
						RMII_MDC	RMII management clock output	**AK3918AV100P/X integrates a Fast Ethernet PHY transceiver and thus needs no more external PHY processors.**

Anyka Confidential For SAT Use Only

PIN NUMBER OF AK3918AV100N	PIN NUMBER OF AK3918AV100P/X	PIN NAME	TYPE	POWER DOMAIN	RESET	PIN MUX	DESCRIPTION	NOTE
72	73	GPIO4/ TWI2_SCL/ SDIO1_DATA3/ SPI2_CS1/ RMII_TXEN	IO/D	DVDD3318_VIVO	I/PU, GPIO4	GPIO4	General purpose input/output port	-
						TWI2_SCL	TWI2 serial clock	-
						SDIO1_DATA3	MMC/SD/SDIO serial data line	**NOTE:** This pin supports SD card plug-in/off detection.
						SPI2_CS1	SPI2 chip selection 1	-
						RMII_TXEN	RMII transmit enable.	**AK3918AV100P/X integrates a Fast Ethernet PHY transceiver and thus needs no more external PHY processors.**
73	74	GPIO9/ CSI_HSYNC/ SDIO1_CMD/ SPI2_DIN(IO1)	IO/D	DVDD3318_VIVO	I/PU, GPIO9	GPIO9	General purpose input/output port	-
						CSI_HSYNC	Horizontal synchronization signal from camera.	
						SDIO1_CMD	MMC/SD/SDIO command line	
						SPI2_DIN(IO1)	SPI2 data input(serial data input/output 1)	
74	75	DVDD3318_VIVO	PWR	DVDD3318_VIVO	-	-	Power supply for CSI and general I/O application	-
75	76	GPIO8/ SDIO1_MCLK/ SPI2_CLK/ RMII_TXD1	IO/D	DVDD3318_VIVO	I/PU, GPIO8	GPIO8	General purpose input/output port	-
						SDIO1_MCLK	MMC/SD/SDIO operating clock	-
						SPI2_CLK	SPI2 clock	-
						RMII_TXD1	RMII transmit data 1.	**AK3918AV100P/X integrates a Fast Ethernet PHY transceiver and thus needs no more external PHY processors.**
76	77	VDD	PWR	VDD	-	-	Digital power supply	-
77	78	GPIO7/ TWI0_SCL/ SDIO1_DATA0/ RMII_TXD0	IO/D	DVDD3318_VIVO	I/PU, GPIO7	GPIO7	General purpose input/output port	-
						TWI0_SCL	TWI0 serial clock	-
						SDIO1_DATA0	MMC/SD/SDIO serial data line	-
						RMII_TXD0	RMII transmit data 0.	**AK3918AV100P/X integrates a Fast Ethernet PHY transceiver and thus needs no more external PHY processors.**

Anyka Confidential For SAT Use Only

PIN NUMBER OF AK3918AV100N	PIN NUMBER OF AK3918AV100P/X	PIN NAME	TYPE	POWER DOMAIN	RESET	PIN MUX	DESCRIPTION	NOTE
78	79	GPIO6/ TWI0_SDA/ SDIO1_DATA1/ RMII_RXD1	IO/D	DVDD3318_VIVO	I/PU, GPIO6	GPIO6	General purpose input/output port	-
						TWI0_SDA	TWI0 serial data	-
						SDIO1_DATA1	MMC/SD/SDIO serial data line	-
						RMII_RXD1	RMII receive data 1.	**AK3918AV100P/X integrates a Fast Ethernet PHY transceiver and thus needs no more external PHY processors.**
79	80	GPIO10/ CSI_VSYNC/ SPI2_DOUT(IO0)/ TWI1_SCL	IO/D	DVDD3318_VIVO	I/PU, GPIO10	GPIO10	General purpose input/output port	-
						CSI_VSYNC	Vertical synchronization signal from camera	
						SPI2_DOUT(IO0)	SPI2 data output(serial data input/output 0)	
						TWI1_SCL	TWI1 serial clock	
80	81	GPIO11/ CSI_SCLK/ PWM2/ SPI2_CS0/ RMII_RXD0/ TWI1_SDA	IO/D	DVDD3318_VIVO	I/PU, GPIO11	GPIO11	General purpose input/output port	-
						CSI_SCLK	Main clock for camera, programmable	-
						PWM2	PWM2 output	-
						SPI2_CS0	SPI2 chip selection 0	-
						RMII_RXD0	RMII receive data 0	**AK3918AV100P/X integrates a Fast Ethernet PHY transceiver and thus needs no more external PHY processors.**
						TWI1_SDA	TWI1 serial data	-
81	-	GPIO16/ SDIO1_MCLK/ PWM0/ UART2_RXD	IO/D	DVDD3318_CIS	I/PU, GPIO16	GPIO16	General purpose input/output port	**NOTE: AK3918AV100P/X does NOT support this pin.**
						SDIO1_MCLK	MMC/SD/SDIO operating clock	
						PWM0	PWM0 output	
						UART2_RXD	UART2 receive pin	
82	82	GPIO17/	IO/D	DVDD3318_CIS	I/PU,	GPIO17	General purpose input/output port	-

Anyka Confidential For SAT Use Only

PIN NUMBER OF AK3918AV100N	PIN NUMBER OF AK3918AV100P/X	PIN NAME	TYPE	POWER DOMAIN	RESET	PIN MUX	DESCRIPTION	NOTE
		CSI_D0/ SPI1_CS/ SDIO1_CMD/ PWM3/ UART2_TXD			GPIO17	CSI_D0	Camera pixel data input.	
						SPI1_CS	SPI1 chip selection	
						SDIO1_CMD	MMC/SD/SDIO command line	
						PWM3	PWM3 output	
						UART2_TXD	UART2 transmit pin	
83	83	GPIO18/ TWI2_SCL/ CSI_D1/ SPI1_CLK	IO/D	DVDD3318_CIS	I/PU, GPIO18	GPIO18	General purpose input/output port	-
						TWI2_SCL	TWI2 serial clock	
						CSI_D1	Camera pixel data input.	
						SPI1_CLK	SPI1 clock	
84	84	GPIO19/ TWI2_SDA/ CSI_D2/ SPI1_DOUT(IO0)	IO/D	DVDD3318_CIS	I/PU, GPIO19	GPIO19	General purpose input/output port	-
						TWI2_SDA	TWI2 serial data	
						CSI_D2	Camera pixel data input.	
						SPI1_DOUT(IO0)	SPI1 data output (serial data input/output 0)	
85	85	GPIO20/ TWI0_SDA/ CSI_D3	IO/D	DVDD3318_CIS	I/PU, GPIO20	GPIO20	General purpose input/output port	-
						TWI0_SDA	TWI0 serial data	
						CSI_D3	Camera pixel data input.	
86	86	VDD	PWR	VDD	-	-	Digital power supply	
87	87	GPIO21/ TWI0_SCL/ CSI_D5	IO/D	DVDD3318_CIS	I/PU, GPIO21	GPIO21	General purpose input/output port	-
						TWI0_SCL	TWI0 serial clock	
						CSI_D5	Camera pixel data input.	
88	88	GPIO23/ CSI_D4	IO/D	DVDD3318_CIS	I/PU, GPIO23	GPIO23	General purpose input/output port	-
						CSI_D4	Camera pixel data input.	

Anyka Confidential For SAT Use Only

PIN NUMBER OF AK3918AV100N	PIN NUMBER OF AK3918AV100P/X	PIN NAME	TYPE	POWER DOMAIN	RESET	PIN MUX	DESCRIPTION	NOTE
89	89	GND	GND	-	-	-	Global ground pin. Connect this pin to the ground on the Printed Circuit Board.	-

Anyka Confidential For SAT Use Only

NOTE

1) AK3918AV100 series processors support three pairs of MIPI pins: MIPI_RX_L0P & MIPI_RX_L0N, MIPI_RX_L1P & MIPI_RX_L1N, and MIPI_RX_L2P & MIPI_RX_L2N.
   - Programmers can select any pair of MIPI pins as MIPI clock lanes.
   - For 1 pair of data lanes plus 1 pair of clock lanes application (1D1C application), users can select any two pairs of these pins as MIPI pins. **It is recommended that the remaining MIPI pins be left unconnected and NOT be multiplexed as GPIO pins.**
   - At one time, all of these pins are used as MIPI pins or otherwise as DVP pins/GPIOs. In the former case, these pins are powered by AVDD3325_MIPIRX (2.5V/3.3V); while in the latter, these pins are powered by DVDD3318_CIS and **AVDD3325_MIPIRX should be connected to a 2.5V/3.3V power supply.** The circuit diagram of multiplexing of MIPI pins is given below.

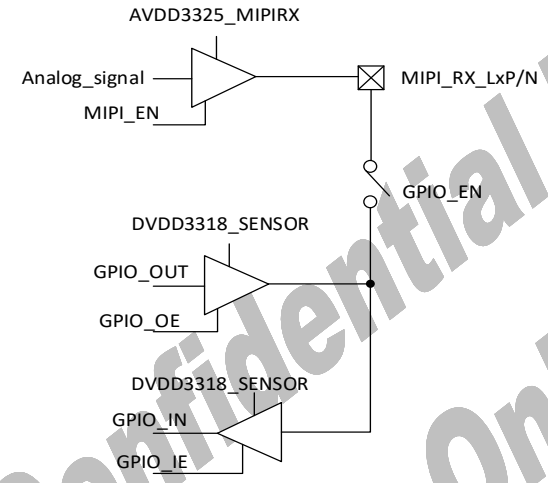

Figure 3-1 The Circuit Diagram of Multiplexing of MIPI pins

2) Among the 59 GPIOs of processor, some GPIOs can be connected to 1.8V or 3.3V power supply, including GPIO[4:11], GPIO[16:23], GPIO[31:37], GPIO[42:47], GPIO[78:79] and GPIO[98:102], while others can only be connected to 3.3V power supply, including GPIO[0:3] , GPIO[24:27], GPIO[48:52], GPIO[55:56], GPIO[58] and GPIO[65:71]. The high impedance state/pull-up/pull-down resistance of GPIOs or other specified pins is shown in the following table, and the pull-up/pull-down function attached to GPIOs can be enabled /disabled by software.

Table 3-2 Resistance range of pull-up and pull-down pins

Voltage	PIN NAME	PU/PD/Z	PU/PD/Z RESISTOR (Unit: KΩ)		
			Min	Norm	Max
1.8V	GPIO[4:11], GPIO[16:23], GPIO[31:33], GPIO[35:36], GPIO[42:47], GPIO[98]	PU	20	-	142.6
	GPIO[34], GPIO[37]	PD	20	-	142.6
	GPIO[78:79], GPIO[99:102]	Z	-	-	-
3.3V	GPIO[0:1], GPIO[3:11] , GPIO[16:23], GPIO[24:27],	PU	16	-	61.4

Anyka Confidential For SAT Use Only

Voltage	PIN NAME	PU/PD/Z	PU/PD/Z RESISTOR (Unit: KΩ)		
			Min	Norm	Max
	GPIO[31:33], GPIO[35:36], GPIO[42:52], GPIO[55:56], GPIO[58], GPIO[67:68], GPIO[98]				
	GPIO[2], GPIO[34], GPIO[37], GPIO[65:66], GPIO[69:71]	PD	16	-	61.4
	GPIO[78:79], GPIO[99:102]	Z	-	-	-

3) The wakeup pins consist of 32 wake-up ports including GPIO[2:3], GPIO[10:11], GPIO[24:27], GPIO[37], GPIO[42], GPIO[44:45], GPIO[48:52], GPIO[55:56], GPIO[58], GPIO[65:71], GPIO[77], AIN0, AIN1, USB_DM, USB_DP.

4) Recommended operating conditions and GPIO drive strength for 3.3V/1.8V application are listed in the following tables.

Table 3-3 Recommended Operating Conditions and GPIO Drive Strength (3.3V Power Supply)

PARAMETER	GPIO	TYPICAL DRIVE STRENGTH
Low level output current (VSS≤I_{ol}@VOL≤0.4V)	GPIO[0:11], GPIO[16:27], GPIO[31:37], GPIO[42:52], GPIO[55:56], GPIO[58], GPIO[65:71], GPIO[78:79] and GPIO[98:102]	Drive strength of those pins is configurable. Refer to Table 3-5 for details.
High level output current (2.4V≤I_{oh}@VOH≤VDDIO)	GPIO[0:11], GPIO[16:27], GPIO[31:37], GPIO[42:52], GPIO[55:56], GPIO[58], GPIO[65:71], GPIO[78:79] and GPIO[98:102]	Drive strength of those pins is configurable. Refer to Table 3-5 for details.
Low level input voltage VSS≤V_{IL}≤0.8V	GPIO[0:11], GPIO[16:27], GPIO[31:37], GPIO[42:52], GPIO[55:56], GPIO[58], GPIO[65:71], GPIO[78:79] and GPIO[98:102]	-
High level input voltage 2.0V≤V_{IH}≤VDDIO	GPIO[0:11], GPIO[16:27], GPIO[31:37], GPIO[42:52], GPIO[55:56], GPIO[58], GPIO[65:71], GPIO[78:79] and GPIO[98:102]	-

Table 3-4 Recommended Operating Conditions and GPIO Drive Strength (1.8V Power Supply)

PARAMETER	GPIO	DRIVE STRENGTH
Low level output current VSS≤ I_{ol} @VOL ≤ 0.2V*VDDIO	GPIO[0:11], GPIO[16:27], GPIO[31:37], GPIO[42:52], GPIO[55:56], GPIO[58], GPIO[65:71], GPIO[78:79] and GPIO[98:102]	Drive strength of those pins is configurable. Refer to Table 3-5 for details.

Anyka Confidential For SAT Use Only

PARAMETER	GPIO	DRIVE STRENGTH
High level output current 0.8V*VDDIO ≤ I_{oh}@VOH ≤VDDIO	GPIO[0:11], GPIO[16:27], GPIO[31:37], GPIO[42:52], GPIO[55:56], GPIO[58], GPIO[65:71], GPIO[78:79] and GPIO[98:102]	Drive strength of those pins is configurable. Refer to Table 3-5 for details.
Input low voltage VSS≤ V_{IL} ≤0.3V * VDDIO	GPIO[0:11], GPIO[16:27], GPIO[31:37], GPIO[42:52], GPIO[55:56], GPIO[58], GPIO[65:71], GPIO[78:79] and GPIO[98:102]	-
Input high voltage 0.7V * VDDIO ≤V_{IH} ≤ VDDIO	GPIO[0:11], GPIO[16:27], GPIO[31:37], GPIO[42:52], GPIO[55:56], GPIO[58], GPIO[65:71], GPIO[78:79] and GPIO[98:102]	-

Table 3-5 Driving Strength Setting Condition

DS[1:0]	@SS, 125℃ 2.97V/0.72V		@SS, 125℃ 2.25V/0.72V		@SS,125℃ 1.62V/0.72V		Unit
	IOL	IOH	IOL	IOH	IOL	IOH	
00	5.9	7.9	6.3	5.8	2.7	3.1	mA
01	11.8	15.7	12.6	11.5	5.4	6.2	mA
10	23.5	31.2	25.3	22.8	10.8	12.5	mA
11	35.2	46.1	37.9	33.9	16.2	18.6	mA

DS[1:0]	@TT, 25℃ 3.30V/0.90V		@TT, 25℃ 2.50V/0.90V		@TT, 25℃ 1.80V/0.90V		Unit
	IOL	IOH	IOL	IOH	IOL	IOH	
00	9.3	16.5	10.7	11.3	5.1	5.0	mA
01	17.7	32.9	21.0	22.6	9.9	9.9	mA
10	32.7	65.2	40.2	45.0	19.1	19.7	mA
11	45.7	96.9	57.7	67.0	27.7	29.5	mA

Anyka Confidential For SATC Only

5) Table 3-6 classifies the AK3918AV100 series processors signals according to different modules.

Table 3-6 AK3918AV100 Series Processors Functional Pin Classification

Module	PIN NAME
1. System Control	XCLK32KI
	XCLK32KO
	XCLK24M_XI
	XCLK24M_XO
2. USB	USB_DP
	USB_DM

Module	PIN NAME
3. Ethernet	RMII_MDC
	RMII_MDIO
	RMII_TXEN
	RMII_TXD[1:0]
	RMII_RXD[1:0]
	RMII_RXER

Module	PIN NAME
	RMII_RXDV
	OPCLK1
	ETH_MDI_BP
	ETH_MDI_BN
	ETH_MDI_AP
	ETH_MDI_AN
	RBIAS
	ETH_LINK_STA_LED
	ETH_LINK_ACT_LED
4. Camera Interface	MIPI_RX_L0P
	MIPI_RX_L0N
	MIPI_RX_L1P
	MIPI_RX_L1N
	MIPI_RX_L2P
	MIPI_RX_L2N
	CSI_SCLK
	CSI_PCLK
	CSI_VSYNC
	CSI_HSYNC
	CSI_D[9:0]
5.MMC/SD/SDIO	eMMC_MCLK
	eMMC_CMD
	eMMC_DATA[3:0]
	SDIO0_MCLK
	SDIO0_CMD
	SDIO0_DATA[3:0]
	SDIO1_MCLK
	SDIO1_CMD
	SDIO1_DATA[3:0]
6. Fast SPI0	SPI0_CS
	SPI0_CLK
	SPI0_DOUT(IO0)
	SPI0_DIN (IO1)
	SPI0_WP (IO2)
	SPI0_HOLD (IO3)
7. SPI1/SPI2	SPI1_CS
	SPI1_CLK
	SPI1_DOUT(IO0)
	SPI1_DIN (IO1)
	SPI2_CS0

Module	PIN NAME
	SPI2_CS1
	SPI2_CLK
	SPI2_DOUT(IO0)
	SPI2_DIN (IO1)
8. TWI	TWI0_SCL
	TWI0_SDA
	TWI1_SCL
	TWI1_SDA
	TWI2_SCL
	TWI2_SDA
9. I2S	I2S_MCLK
	I2S_LRCLK
	I2S_BCLK
	I2S_DIN
	I2S_DOUT
10. UART	UART0_RXD
	UART0_TXD
	UART1_RXD
	UART1_TXD
	UART2_RXD
	UART2_TXD
	UART2_CTS
	UART2_RTS
11. PWM	PWM[0:4]
12. GPIO	GPIO[0:11]
	GPIO[16:27]
	GPIO[31:37]
	GPIO[42:52]
	GPIO[55:56]
	GPIO[58]
	GPIO[65:71]
	GPIO[78:79]
	GPIO[98:102]
13. SAR ADC	AIN0
	AIN1
14. Audio Analog Interface	HPOUT
	MIC_N
	MIC_P
15. Power and Grounds	AVDD3325_MIPIRX
	VDD

Anyka Confidential for SAT Use Only

Module	PIN NAME
	DVDD33_OSC
	AVDD_PLL
	DVDD3318_FLASH
	VDDIO_DDR
	DVDD33
	VCM2
	VCM3
	AVSS_AC

Module	PIN NAME
	HPVDD
	VCC_RTC
	DVDD3318_VIVO
	DVDD3318_CIS
	DVDD12_FE
	AVDD12_FE
	AVDD33_FE

Anyka Confidential For SAT Use Only

4 Electrical Specifications

4.1 Absolute Maximum Ratings

This part aims to list the recommended stress ratings, and stresses greater than those listed may cause permanent damage to the device. Functional operations of the device at these or any other conditions outside those indicted in the operational sections of this specification are not implied. Exposure to absolute maximum rating conditions for extended period may affect reliability.

Table 4-1 AK3918AV100 Series Processors Absolute Maximum Ratings

RATING	SYMBOL	MIN.	MAX.	UNIT
VDD supply voltage relative to e-GND	VDD	-0.30	1.1	V
DVDD33 supply voltage relative to e-GND	DVDD33	-0.30	3.63	V
DVDD3318_VIVO supply voltage relative to e-GND	DVDD33_VIVO	-0.30	3.63	V
	DVDD18_VIVO	-0.30	1.98	V
AVDD3325_MIPIRX supply voltage relative to e-GND	AVDD33_MIPIRX	-0.30	3.63	V
	AVDD25_MIPIRX	-0.30	3.63	V
HPVDD supply voltage relative to AVSS	HPVDD	-0.30	3.63	V
DVDD33_OSC supply voltage relative to e-GND	DVDD33_OSC	-0.30	3.63	V
VDDIO_DDR supply voltage relative to e-GND	VDDIO_DDR	-0.30	1.9	V
AVDD_PLL supply voltage relative to e-GND	AVDD_PLL	-0.30	1.1	V
VCC_RTC supply voltage relative to e-GND	VCC_RTC	-0.30	3.63	V
DVDD3318_FLASH supply voltage relative to e-GND	DVDD33_FLASH	-0.30	3.63	V
	DVDD18_FLASH	-0.30	1.98	V
AVDD33_FE supply voltage relative to e-GND	AVDD33_FE	-0.30	3.63	V
DVDD12_FE supply voltage relative to e-GND	DVDD12_FE	-0.20	1.50	V
AVDD12_FE supply voltage relative to e-GND	AVDD12_FE	-0.20	1.50	V
DVDD3318_CIS supply voltage relative to e-GND	DVDD33_CIS	-0.30	3.63	V
	DVDD18_CIS	-0.30	1.98	V
AVSS_AC supply voltage relative to e-GND	AVSS_AC	-0.30	0	V
VCM2 supply voltage relative to e-GND	VCM2	-0.30	1.60	V
Ambient Operating Temperature	T_A	-20	70	℃
Storage Temperature	T_{STG}	-40	125	℃
Die Junction Temperature	T_J	-	125	℃

Anyka Confidential For SAT Use Only

4.2 Recommended Operating Range

Table 4-2 Recommended Operating Range

RATING		SYMBOL	MIN.	TYP.	MAX.	UNIT
VDD supply voltage relative to e-GND		VDD	0.72	0.80	0.88	V
DVDD33 supply voltage relative to e-GND		DVDD33	2.97	3.30	3.63	V
DVDD3318_VIVO supply voltage relative to e-GND		DVDD33_VIVO	2.97	3.30	3.63	V
		DVDD18_VIVO	1.65	1.80	1.95	V
AVDD3325_MIPIRX supply voltage relative to e-GND		AVDD33_MIPIRX	2.97	3.30	3.63	V
		AVDD25_MIPIRX	2.25	2.50	2.75	V
HPVDD supply voltage relative to AVSS		HPVDD	2.97	3.30	3.63	V
DVDD33_OSC supply voltage relative to e-GND		DVDD33_OSC	2.97	3.30	3.63	V
VDDIO_DDR supply voltage relative to e-GND		VDDIO_DDR2	1.40	1.50	1.60	V
AVDD_PLL supply voltage relative to e-GND		AVDD_PLL	0.72	0.8	0.88	V
VCC_RTC supply voltage relative to e-GND		VCC_RTC	2.50	3.30	3.63	V
DVDD3318_FLASH supply voltage relative to e-GND		DVDD33_FLASH	2.97	3.30	3.63	V
		DVDD18_FLASH	1.65	1.80	1.95	V
AVDD33_FE supply voltage relative to e-GND		AVDD33_FE	2.97	3.3	3.63	V
DVDD12_FE supply voltage relative to e-GND		DVDD12_FE	1.08	1.20	1.32	V
AVDD12_FE supply voltage relative to e-GND		AVDD12_FE	1.08	1.20	1.32	V
DVDD3318_CIS supply voltage relative to e-GND		DVDD33_CIS	2.97	3.30	3.63	V
		DVDD18_CIS	1.65	1.80	1.95	V
AVSS_AC supply voltage relative to e-GND		AVSS_AC	-	0	-	V
VCM2 supply voltage relative to e-GND		VCM2	-	1.50	-	V
Mode 1	CPU Frequency (VDD=0.8V)	F_{CPU}	-	888	900	MHz
	DDR2 PHY Frequency (VDDIO_DDR=1.5V)	$F_{DDR2\ PHY}$	-	444	450	MHz
Mode 2	CPU Frequency (VDD=0.8V)	F_{CPU}	-	444	-	MHz
	DDR2 PHY Frequency (VDDIO_DDR=1.5V)	$F_{DDR2\ PHY}$	-	444	-	MHz

Anyka Confidential For SAT Use Only

4.3 ESD Ratings

Table 4-3 ESD Ratings

PARAMETER	SYMBOL	CONDITION	Min	Typ	Max	UNIT	NOTE
ESD Human Body Mode	HBM	-	-	-	±2000	V	See note

NOTE

HBM test is based on MIL-STD-883G Method 3015.7.

4.4 DC Electrical Characteristics

Table 4-4 DC Electrical Characteristics (3.3V IO Application)

PARAMETER	SYMBOL	MIN.	TYP.	MAX.	UNIT
Input High Voltage	V_{IH}	2.00	-	DVDD	V
Input Low Voltage	V_{IL}	VSS	-	0.80	V
Output High Voltage @ IOH(min)	V_{OH}	2.40	-	DVDD	V
Output Low Voltage @I_{OL} (min)	V_{OL}	VSS	-	0.40	V
Input Leakage Current	I_L	-5.00	-	+5.00	μA
Tri-state Output Leakage Current	I_{OZ}	-	-	±10	μA
Headphone output load resistance	R_{HP}	32	-	-	Ω

NOTE

I_{OL} and I_{OH} condition should refer to the particular value according to the different driving strength.

Table 4-5 DC Electrical Characteristics (1.8V IO Application)

PARAMETER	SYMBOL	MIN.	TYP.	MAX.	UNIT
Input High Voltage	V_{IH}	0.70*VDDIO	-	DVDD	V
Input Low Voltage	V_{IL}	VSS	-	0.30*DVDD	V
Output High Voltage @ I_{OH}(min)	V_{OH}	0.80*VDDIO	-	DVDD	V
Output Low Voltage@ I_{OL} (min)	V_{OL}	VSS	-	0.20*DVDD	V
Input Leakage Current(Non-tolerant)	I_L	-5.00	-	+5.00	μA
Tri-state Output Leakage Current	I_{OZ}	-	-	±10	μA

NOTE

I_{OL} and I_{OH} condition should refer to the particular value according to the different driving strength.

Anyka Confidential For SAT Use Only

4.5 AC Electrical Characteristics

The AC characteristics consist of output delays, input setup and hold times, and signal skew times. All signals are specified relative to an appropriate edge of other signals.

Table 4-6 32 KHz/24M Hz Oscillator Signal Timing

PARAMETER	MIN.	TYP.	MAX.	UNIT
XTAL32KHz Startup Time	-	-	2.0	s
XTAL24MHz Startup Time	-	6	-	ms

Table 4-7 HS Receiver AC specifications (only for MIPI CSI mode)

PARAMETER	MIN.	TYP.	MAX.	UNIT
△VCMRX(HF) Common-point interference > 450MHz	-	-	0.050	V
△VCMRX(LF) 50MHz<Common-point interference ≤ 450MHz	-0.025	-	0.025	V
Ccp	-	-	60	pF

NOTE

1) Excluding “static” ground shift of 50mV.
2) △VCMRX(HF) is the peak amplitude of a sine wave superimposed on the receiver inputs.
3) For higher bit rates a 14 pF capacitor will be needed to meet the common-mode return loss specification.
4) Voltage difference compared to the DC average common mode potential

Table 4-8 LP Receiver AC specifications (only for MIPI CSI mode)

PARAMETER	MIN.	TYP.	MAX.	UNIT
TMINRX	20	-	-	ns
VINT	-	-	0.20	V
FINT	450	-	-	MHz

NOTE

1) Time-voltage integration of a spike above VIL when being in LP-0 state or below VIH when being in LP-1 state.
2) An impulse less than this will not change the receiver state.
3) In addition to the required glitch rejection, implementer shall ensure rejection of known RF-interferers.
4) An input pulse greater than this shall toggle the output.

Table 4-9 CMOS Receiver AC specifications (CMOS mode)

PARAMETER	MIN.	TYP.	MAX.	UNIT
TMIN-RX	8	-	-	ns
VINT	-	-	0.20	V
FINT	450	-	-	MHz

Anyka Confidential For SAT Use Only

4.6 Analog Interface Characteristics

Table 4-10 Analog Interface Characteristics

PARAMETER	SYMBOL	MINIMUM	TYPICAL	MAXIMUM	UNIT
Microphone Input Resistance	RMic	-	6K	-	Ω
Headphone output load resistance	RHP	32	-	-	Ω

Anyka Confidential For SAT Use Only

5 Package Information

AK3918AV100 series processors are packaged in a 88-pin QFN with 9.00mm x 9.00mm x 0.90mm.

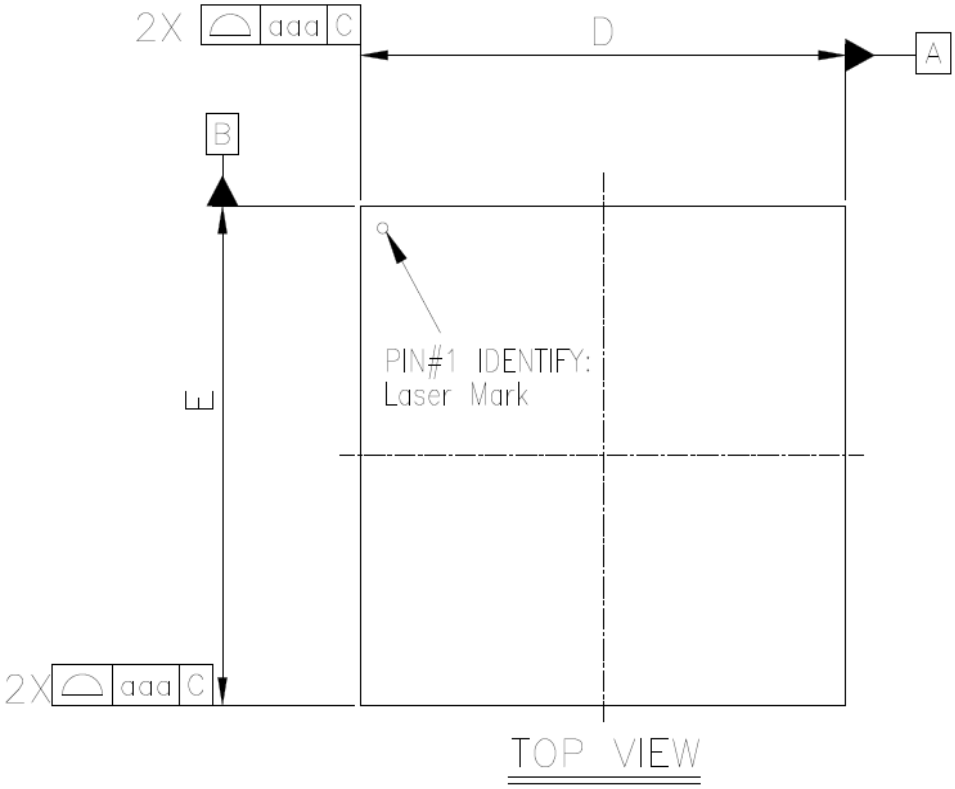

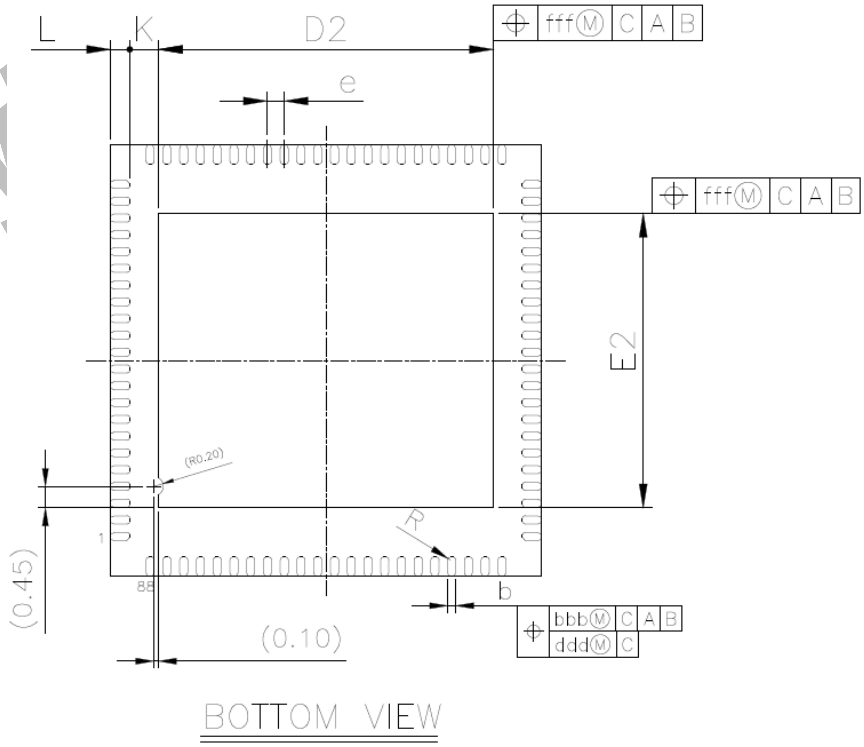

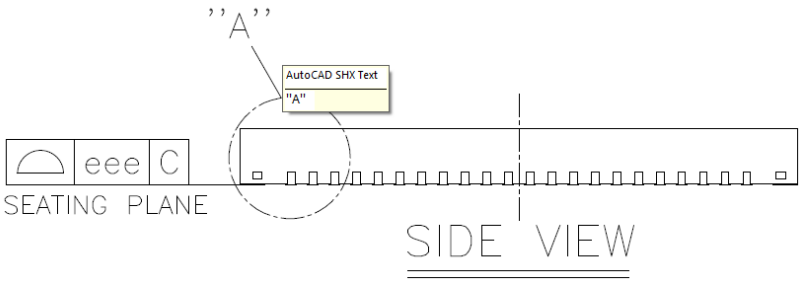

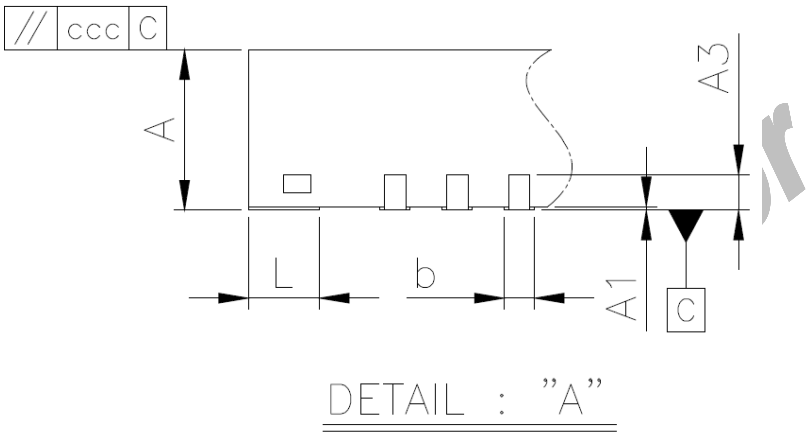

SYMBOL	Dimension in mm		
	MIN	NOM	MAX
A	0.85	0.90	0.95
A_1	0.00	0.02	0.05
A_3	0.20 REF		
b	0.12	0.17	0.22
D	8.90	9.00	9.10
E	8.90	9.00	9.10
D2	6.90	7.00	7.10
E2	6.05	6.15	6.25
e	0.35 BSC		
L	0.30	0.40	0.50
K	0.20	-	-
R	0.06	-	0.11
aaa	0.10		
bbb	0.07		
ccc	0.10		
ddd	0.05		
eee	0.08		
fff	0.10		

Anyka Confidential
SAT Use Only

6 Reflow Profile

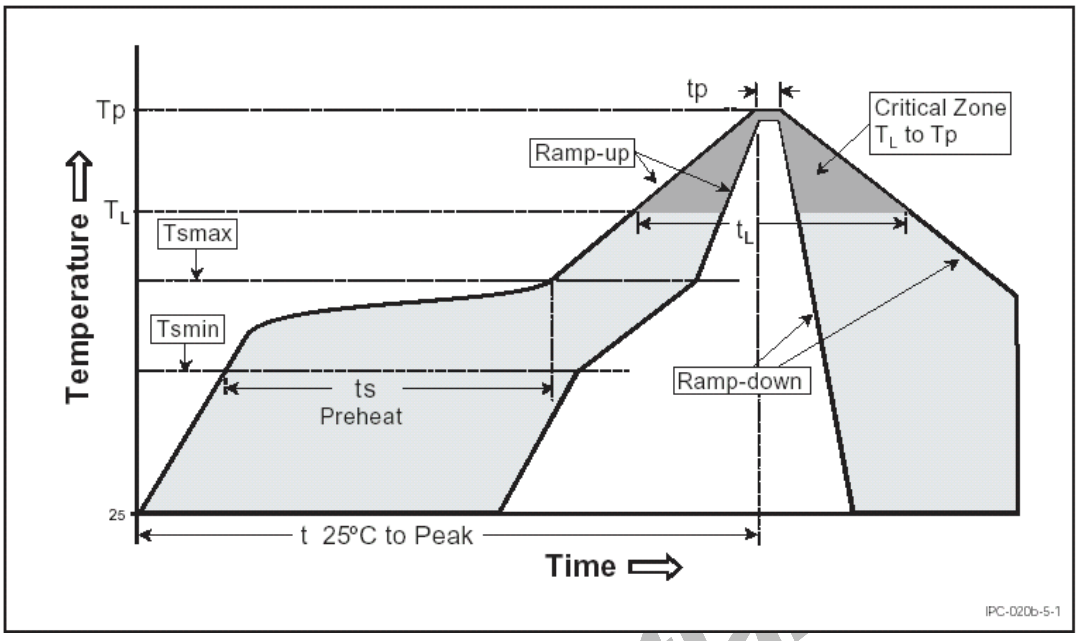

Figure 6-1 Recommended Reflow Profile

Table 6-1 Reflow Profile Condition

Profile Feature	Pb-Free Assembly
Average ramp-up rate (Ts_{max} to T_P)	2 ℃/second max
Preheat -Temperature Min(Ts_{min}) -Temperature Max(Ts_{max}) -Time (min to max) (ts)	150 ℃ 200 ℃ 60 – 180 seconds
Time maintained above: -Temperature (T_L) -Time (t_L)	217 ℃ 60 – 150 seconds
Peak Temperature (T_P)	245+5/-5 ℃
Time within 5℃ of actual Peak Temperature(tp)	30 seconds max
Ramp-down Rate	3℃/second max
Time 25℃ to Peak Temperature	8 minutes max

NOTE

All temperatures refer to topside of the package, measured on the package body surface.

Anyka Confidential
SAT Use Only

7 Storage and Baking

1. Package moisture sensitivity is level 3.
2. Shelf life in sealed bag: 12 months at < 30℃ and < 60% relative humidity (RH).
3. After bag is opened, device that will be subjected to reflow solder or other high temperature process must be:
   a) Mounted within: 168 hours of factory conditions < 30℃/60% RH
      or
   b) Stored at < 20% RH.
4. Devices require bake, before mounting, if:
   a) Humidity indicator card reads >= 20% when read at 25±5℃;
   b) 2a or 2b are not met.
5. If baking is required, device may be baked for 12 hours at 125℃±5℃.

Anyka Confidential For SAT Use Only

8 System Control

8.1 Reset Module

The RST signal, when asserted low, puts all registers (with the exception of those in Always-on module) into predefined values. Once the reset signal is deasserted, CPU will reload the boot program stored in the on-chip ROM.

8.1.1 Features

Features of reset module are as follows:

- Supports two global reset sources
  - Hardware internal power-on reset
  - Watchdog reset (global reset except crystal oscillator stabilization counter in core domain)
- Controls the separate soft reset of each functional module. For more, please refer to Chapter 4.1.4 in *AK3918AV100 Series Processors Programmer's Guide*.

8.1.2 Power on Reset Timing

AK3918AV100 series processors support power-on/Brown-out detection of DVDD33 IO ports, based on which the chip generates power-on/Brown-out reset signals. Figure 8-1 shows the reset timing of AK3918AV100 series processors.

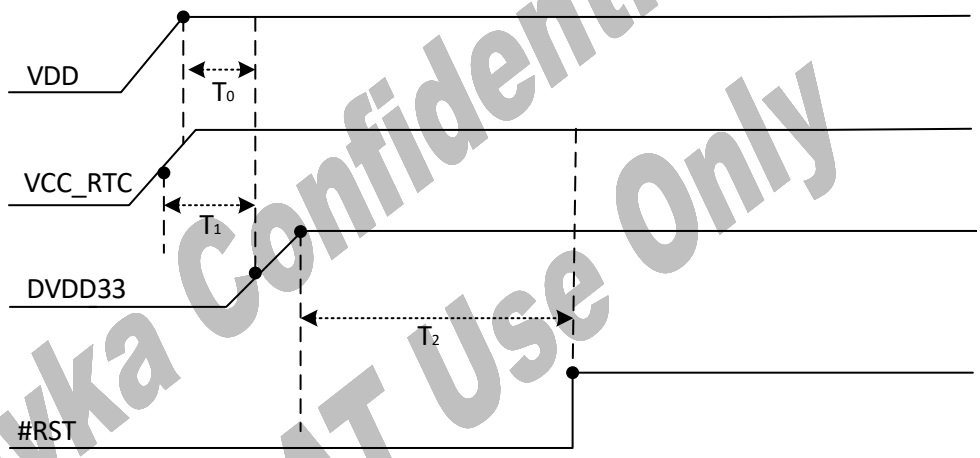

Figure 8-1 AK3918AV100 Series Processors Power on Reset Timing

NOTE

1) $T_0 \geqslant 0ms$; $T_1 \geq 0ms$
2) T_2 is about 10ms.

8.2 Clock Generation and Control

8.2.1 Overview

Clock module controls clock inputs, divides clock frequencies, and generates working clocks for all the modules.

8.2.2 Features

The features of clock modules are as follows:

- Two external crystal input: a 32.768 KHz crystal oscillator and a 24MHz crystal oscillator
- Three independent PLLs

Anyka Confidential For SAT Use Only

- 32.768 KHz crystal oscillator or internal 32KHz RC oscillator generates working clock for RTC
- Supports multiple output clocks for various peripherals, reducing total BOM of end products
- Flexible clock sources for ISP, NPU, Video Processor and CMOS image sensor

8.3 Bootstrap Module

8.3.1 Overview

AK3018AV100 processor supports normal boot and secure boot to meet different application needs.

8.3.2 Features

Features of bootstrap module are as follows:

- Supports normal boot & secure boot:
  - SPI NOR Flash Boot
  - SPI NAND Flash Boot
  - eMMC/MMC/SD Boot
  - USB Mass Storage Boot
  - UART Boot

8.3.3 Block Diagram

Once powered on, AK3018AV100 processor will enter normal boot mode or secure boot mode based on security level. In normal boot mode, the bootstrap reads the value of GPIO[46]. When GPIO[46] is 1, the chip will boot from SPI NOR Flash/SPI NAND Flash. When GPIO[46] is 0, it will boot from eMMC/MMC/SD. When both SPI boot and eMMC/MMC/SD boot fail, the bootstrap will first try UART boot and then USB boot. The boot flow is shown in the following chart. For more details about security level and secure boot flow, please refer to *Secure Boot User Guide* (《安全启动使用指南》).

Anyka Confidential For SAT Use Only

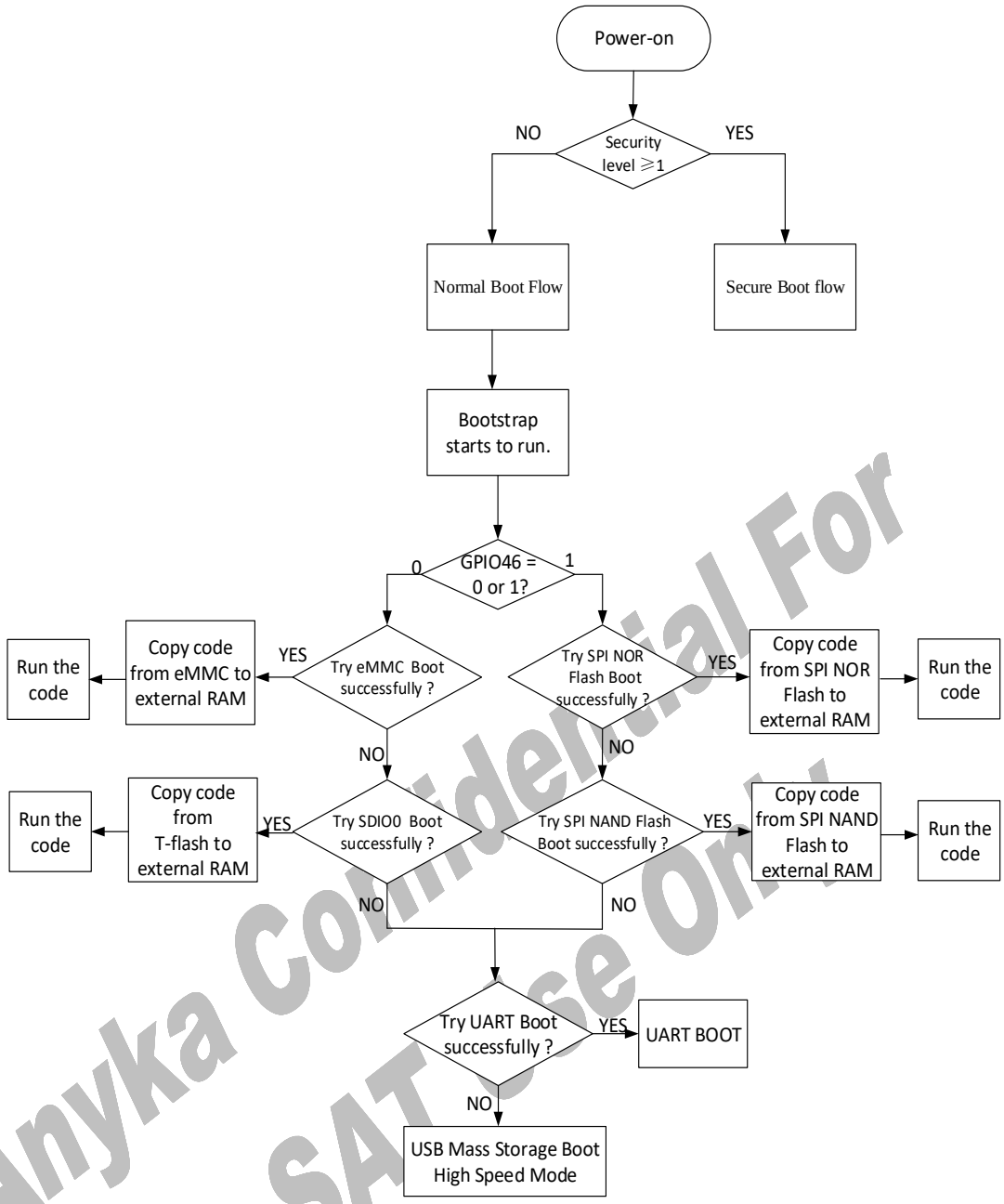

Anyka Confidential For SAT Use Only

Figure 8-2 AK3918AV100 Series Processors Boot Flow

8.4 CPU Core

8.4.1 Overview

The CPU core is a microprocessor named ARM926EJ-S from ARM Limited. The ARM926EJ-S processor is targeted at multi-tasking applications where full memory management, high performance, low die size, and low power are all important. The ARM926EJ-S processor supports the 32-bit ARM and 16-bit Thumb instruction sets, enabling the user to trade off between high performance and high code density. The ARM926EJ-S processor includes features for efficient execution of Java byte codes, providing Java performance similar to JIT, but without the associated code overhead. The ARM926EJ-S processor supports the ARM debug block diagram and includes logic to assist in both hardware and software debug.

8.4.2 Features

The ARM926EJ-S processor has a Harvard cached block diagram and provides a complete high-performance processor subsystem, including:

- An ARM926EJ-S integer core
- A Memory Management Unit (MMU)
- Separate instruction and data AMBA AHB bus interfaces

For more details on ARM926EJ-S, please refer to the technical manuals of ARM Limited.

8.5 Interrupt Module

8.5.1 Overview

The interrupt module collects interrupt requests from the core & analog module and provides an interface to the CPU.

8.5.2 Features

Features of interrupt module are as follows:

- Supports IRQ and FIQ interrupt
- Supports interrupt mask/not mask function
- Supports multiple interrupt sources

8.5.3 Architecture

CPU core responds to the interrupts according to priority and mask, when the CPU receives multiple interrupts, it should acknowledge the interrupts are masked or not and then decide which interrupt gets the higher priority the CPU will respond firstly.

8.5.3.1 Interrupt Priority

The interrupt module supports both fast and normal interrupts, when multiple interrupt requests are sent at the same time, the fast interrupts get the higher priority.

8.5.3.2 Interrupt Mask

The interrupt module can mask or unmask every interrupt source of normal and fast interrupts with specific bit of mask registers. Only the interrupt requests from unmasked interrupt source are responded. The core keeps on sending the interrupt request until it is informed by software that its request has been responded. The interrupt request can be generated from various sources which are listed in the following table.

Anyka Confidential For SAT Use Only

Table 8-1 IRQ/FIQ Sources

IRQ/FIQ Sources	Interrupt Name
Peripheral	UART[2:0]
	TWI[2:0]
	SPI[2:0]
	Ethernet MAC
	MMC/SD/SDIO Controller[2:0]
	USB DMA/CPU
	GPIO
Memory	L2 Buffer[1:0]
	Memory Controller
Multimedia	Image Capture
	CIS[1:0] (Including the CIS error interrupt)

IRQ/FIQ Sources	Interrupt Name
	Video Processor
	Encryption
	NPU
System	System Control
Analog	Sigma-Delta ADC Controller
	Sigma-Delta DAC Controller

8.6 Working Modes

8.6.1 Overview

AK3918AV100 series processors implement a simple and powerful power control mechanism, which provides the following four working modes:

NORMAL MODE

- All clocks can run
- All PLLs can be enabled
- All modules can be enabled
- All powers supplies are enabled
- Always on module works
- DRAM works in normal mode

STANDBY MODE

- All clocks stop
- All PLLs are disabled
- All power supplies are enabled
- Always on module works
- DRAM works in self-refresh mode
- Support various wake-up sources

SLEEP MODE

- CORE power supply is disabled
- All module is power off except RTC module
- Support RTC wake-up

POWER OFF MODE

- All power supplies are disabled

8.6.2 Wake-up Control

8.6.2.1 Overview

This module is used to wake up the AK3918AV100 series processors from standby/sleep mode when the wake-up signal is valid and the wake-up function of specific wake up source is enabled.

8.6.2.2 Features

Wake-up control module provides the following functions:

- For standby mode
  - Supports up to 28 GPIO wake-up ports
  - Supports other wake-up sources including RTC, AIN0, AIN1, USB_DM and USB_DP
- For sleep mode
  - When the external power supply for the AK3918AV100 processor is connected, the chip will be waked up.
- Supports wake-up enabling and disabling function control
- Supports GPIO wake-up polarity selection

8.7 Timer/PWM

8.7.1 Overview

The Timer module mainly implements timing and counting functions. AK3918AV100 series processors include 10 general purpose timers (Timer0~9), each of which has its own 32-bit down-counter.

8.7.2 Features

The PWM/Timer controller has the following features:

- 5 pairs of PWM/Timer units(Timer0~PWM0, ……, Timer4~PWM4)
- 16-bit high-level pulse control and 16-bit low-level pulse control in PWM mode
- Minimum duty cycle: 1/65536 (on for 1/65536, and off for the other 65535/65536)
- Maximum duty cycle: 65535/65536 (on for 65535/65536, and off for the 1/65536)
- Supports PWM frequency ranging from 92Hz to 6MHz (frequency pre-divider disabled)
- Current value of Timer counter could be read back by host processor
- Timer counters are down counters
- A clock pre-divider is provided to each PWM/Timer
- Supports three kinds of working modes: PWM Mode, Auto-reload Timer Mode and One-shot Timer Mode

8.7.3 Functional Description

These timers can work in three modes, PWM Mode (Timer0~4), Auto-reload Timer Mode, and one-shot Timer Mode. When the timer counts down to 0, a level signal of interrupt is generated.

8.7.3.1 Working Mode

8.7.3.1.1 PWM Mode

When the register of 32-bit timer is enabled, the rising edge is symbolled as starting up to load the number of clock cycle under low level. Timer is decremented by 1 from the predefined value when pre-divider counting equals to pre-divider value under enabled condition, decreasing progressively until Timer's predefined value equals to 0. When decrementing to 0, the number of clock cycle under high level is loaded for counting and restart to count, so the work flow begins again. In PWM Mode, the duty cycle and frequency of PWM are configurable.

Anyka Confidential For SAT Use Only

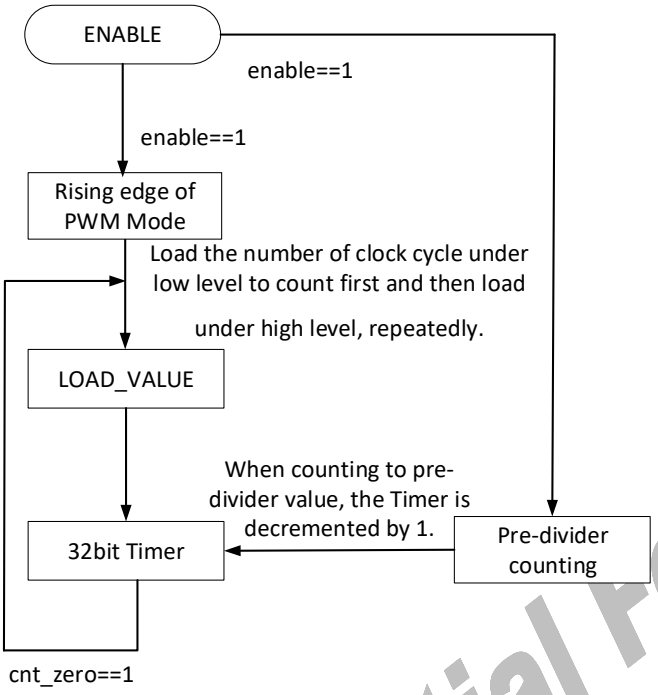

Figure 8-3 Timer work-flow of PWM Mode

8.7.3.1.2 Auto-reload Timer Mode

In Auto-reload Timer Mode, the timer loads predefined value, and an interrupt is generated when it down counts to zero. The Auto-reload Timer keeps counting unless it is disabled.

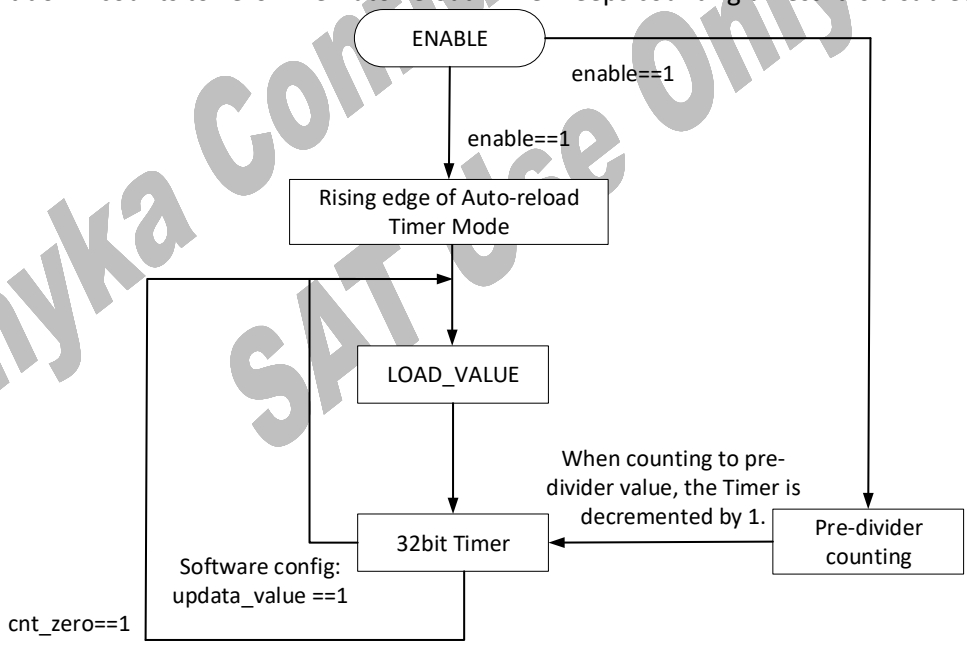

Figure 8-4 Timer work-flow of Auto-reload Timer Mode

8.7.3.1.3 One-shot Timer Mode

In One-shot Timer Mode, the timer will stop as it reaches zero and count only once. It will start to recount until another One-shot Timer Mode begins or it is converted into Auto-reload Timer Mode.

Anyka Confidential For SAT Use Only

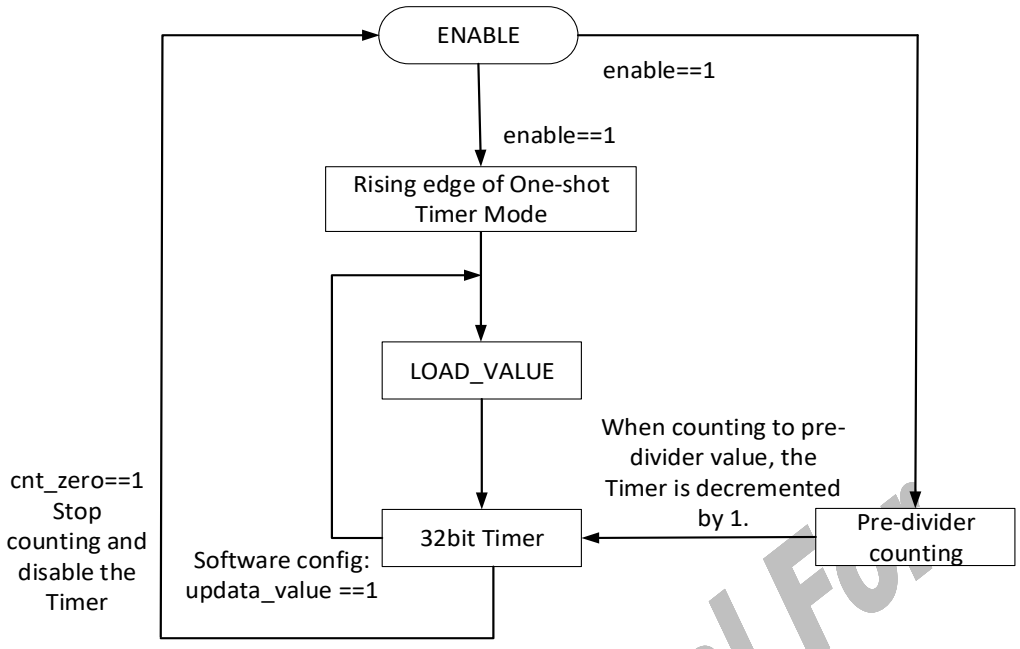

Figure 8-5 Timer work-flow of One-shot Timer Mode

8.7.3.2 Predefined Value Setting

In One-shot mode, the predefined value is set at the beginning of the whole counting procedure.

In Auto-reload Timer Mode, the predefined value is set when the cycle symbol is 1 which means bit[29] of the *PWM/Timer0 Control Register 1 (Address: 0x0800,00B8)* is 1 and the write signal is high.

8.7.4 Pulse Width Modulation

Pulse Width Modulation (PWM) is a method of digitally encoding analog signal levels. Through the use of high-resolution counters, the duty cycle of the square wave is modulated to encode the level of a specific analog signal. The PWM signal is still digital, because at any given moment, the full-scale DC power supply is either completely ON or completely absent (OFF). So the output voltage adjustment is achieved by adjusting the high and low level frequencies.

PWM frequency refers to the number of times the signal goes from high level to low level to high level in 1 second (one cycle), that is, how many cycles of PWM in one second.

PWM duty cycle: in a pulse period, the ratio of the duration of the positive pulse to the total period of the pulse, that is, the ratio of the cycle time occupied by the high level to the entire cycle time (t:T).

8.8 RTC

8.8.1 Overview

The RTC module serves as a real-time clock with calendar function, which sources from an external 32.768 KHz crystal or the internal 32 KHz RC oscillator. Except RTC, all the modules

Anyka Confidential For SAT Use Only

will be powered off when AK3918AV100 series processors are in sleep/power down mode. While the system is powered off, this module may be driven by the backup battery.

8.8.2 Features

This module mainly provides the following functions:

- Supports real-time clock
- Alarms or wake-up signals in sleep mode
- Interrupts in normal operating mode
- A watchdog timer
- An RTC timer
- Watchdog event interrupt output

8.8.3 Block Diagram

Power supply of RTC is shown in the following figure.

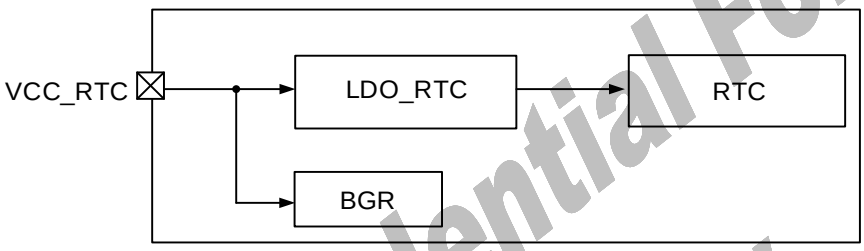

Figure 8-6 Power Supply of RTC

8.8.3.1 On-chip LDO_RTC

On-chip LDO_RTC is always on and it provides power rail for RTC module, and the output voltage of on-chip LDO_RTC is configurable.

8.8.3.2 BGR

An on-chip Band Gap Reference (BGR) is integrated with a default value of 1.5V, which is used to provide reference voltage for AK3918AV100 series processors during normal working mode.

8.9 Tsensor

8.9.1 Overview

Tsensor module is mainly integrated to monitor chip temperature. When current temperature of the chip reaches one of the threshold values (configurable by software), an interrupt will be generated so that programmer can reconfigure the chip accordingly.

8.9.2 Features

The features of Tsenor controller are as follows:

- Tsensor works at 12MHz clock domain.
- Support one-time/cyclic temperature monitoring
- Support threshold interrupt and sample completion interrupt function
- Temperature detection range: -40℃ ~ 120℃

Anyka Confidential For SAT Use Only

9 Memory

9.1 L2 Memory

L2 memory is an on-chip SRAM, which is considered as a bridge to connect external memory and peripherals. In order to satisfy the demands of high performance, 2 buffers are integrated for data transmission.

9.1.1 L2 Buffer0

9.1.1.1 Overview

L2 buffer0 contains 1344 x 32bits memory for data transfer between two different interfaces or between external memory and a certain interface.

9.1.1.2 Features

Features of L2 buffer0 are as follows:

- 16 blocks
- 32-bit data width
- Fixed priority
- Supports data transfer to/from external memory by DMA mode
- Supports data transfer between two blocks
- Supports direct access of CPU by AHB bus
- Used as system status and command cache when the processor is booted or in standby mode

9.1.1.3 Block Diagram

Block diagram of L2 buffer0 is shown in the following figure.

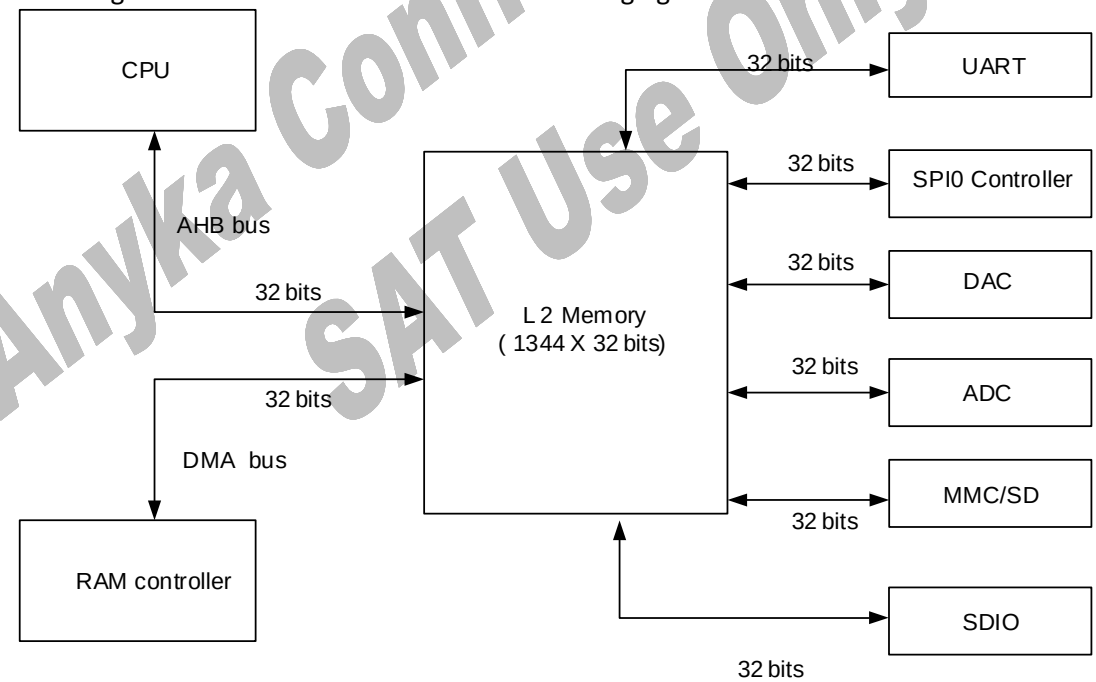

Figure 9-1 L2 Memory Block Diagram

Anyka Confidential For SAT Use Only

9.1.2 L2 Buffer1

9.1.2.1 Overview

L2 buffer1 contains 1088 x 32bits memory for data transfer between two different interfaces, or between external memory and a certain interface.

9.1.2.2 Features

Features of L2 buffer1 are as follows:

- 9 blocks
- 32-bit data width
- Fixed priority
- Supports data transfer to/from external memory by DMA mode
- Supports data transfer between two blocks
- Supports direct access of CPU by AHB bus
- Used as system status and command cache when the processor is booted or in standby mode

9.1.2.3 Block Diagram

Block diagram of L2 buffer1 is shown in the following figure.

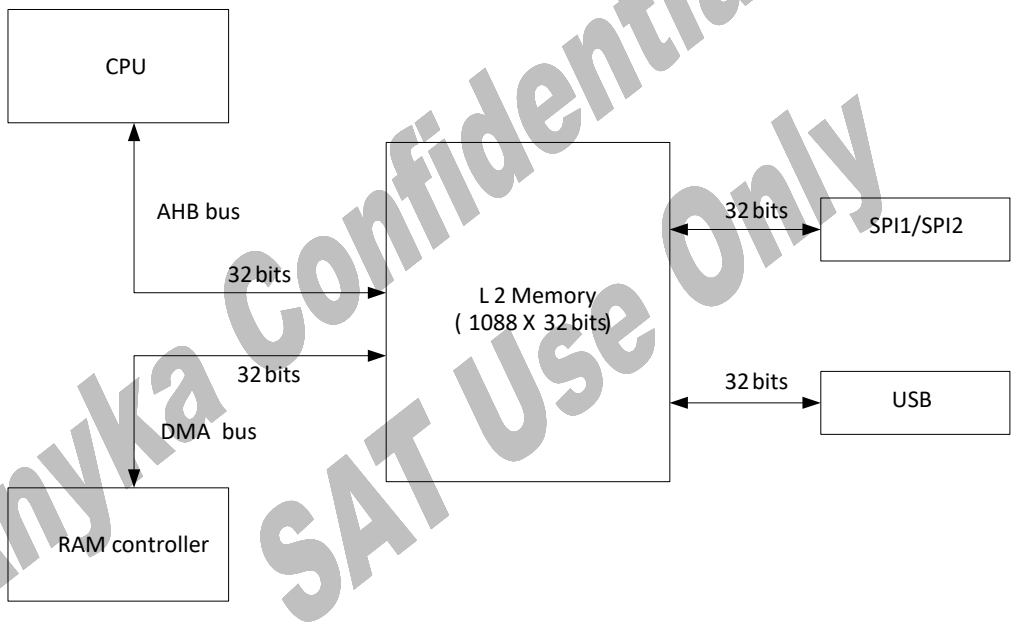

Anyka Confidential For SAT Use Only

Figure 9-2 L2 Memory Block Diagram

9.2 RAM Controller

9.2.1 Overview

The RAM controller is the bridge logic that connects an internal unit to the stacked DDR2 SDRAM.

9.2.2 Features

Features of RAM controller are as follows:

- Supports 16-bit data bus width
- Supports DDR2 SDRAM only

- Up to 450MHz DDR2 clock
- One ODT control pin for DDR2
- One chip selected only
- Differential DQS only
- Sequential burst type only
- 4-bit burst length only
- Configurable CAS latency (2, 2.5, 3, 4, 5, 6 and 7, among which DDR2 only supports 2, 3, 4, 5 and 6)
- No Additive Latency
- The clock frequency ratio between PHY/Controller Core (high speed clock) and System Bus can be 2:1 or 1:1
- The frequency of high speed clock is the same as memory interface clock

9.3 Fast SPI (SPI0)

9.3.1 Overview

AK3918AV100 series processors support one Fast SPI Controller (SPI0) for SPI NOR Flash or SPI NAND Flash.

9.3.2 Features

Features of SPI0 controller are as follows:

- Compatible with SPI Protocol, Version 2.11
- Works in master mode only
- Supports half-duplex transmission
- Supports polling mode and interrupt mode
- Supports CPU mode and DMA mode
- Supports Transmit Garbage Data Mode (TGDM) and Auto Reject Received Data Mode (ARRM)
- Supports Standard SPI, Dual SPI, and Quad SPI
- Supports two timing modes: mode 0 (CPOL = 0, CPHA = 0) and mode 3 (CPOL = 1, CPHA = 1)

The following figure shows the timing diagram of Mode 0 & Mode 3 of SPI0.

Anyka Confidential For SAT Use Only

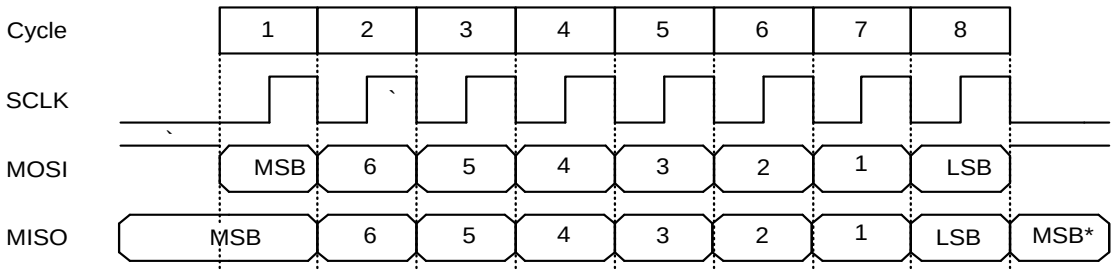

CPOL=0,CPHA=0(Format A)

* MSB of the character just received

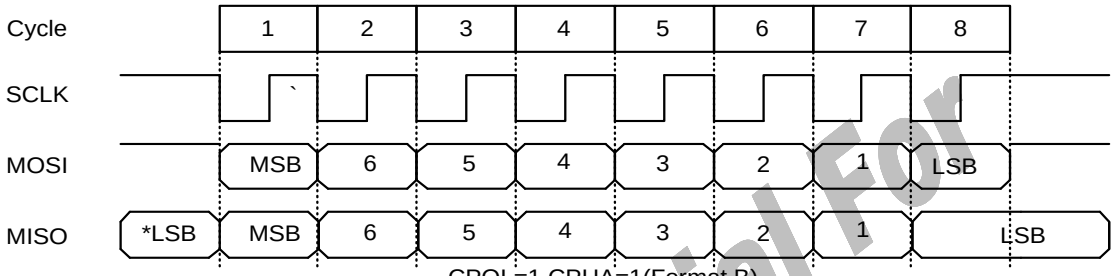

CPOL=1,CPHA=1(Format B)

* LSB of the previously transmitted character

Notes:
MOSI: data output in master mode; data input in slave mode
MISO: data input in master mode; data output in slave mode

Figure 9-3 Timing Diagram of Mode 0 & Mode 3 of SPI0

Anyka Confidential For SAT Use Only

10 Multimedia

AK3918AV100 series processors integrate image capture, ISP, pre-processor and video processor to provide high multimedia performance.

10.1 Image Capture

10.1.1 Overview

The image capture module acquires data and synchronous signals from the external CMOS image sensor, performs data format conversion, shrinks the data, and routes the data to memory.

10.1.2 Features

The features of image capture module are as follows:

- Supports two kinds of mode
  - Single CMOS Image Sensor with DVP interface
  - Single CMOS Image Sensor with MIPI interface
- Supports DVP interfaces
  - Compatible with BT.601/BT.656/BT.1120 standard
  - Supports Bayer RGB data, YUV422 data and JPEG compressed data
- Supports 1/2-lane MIPI interfaces with Bayer RAW data
  - Compliant with MIPI Alliance Standard for Camera Serial Interface 2(CSI-2)
  - Supports Bayer RAW data, YUV422 data, YUV420 data, JPEG compress data and other commonly-used data
  - Supports high speed and low power lane operation
  - Supports GPIO mode on MIPI ports when MIPI CSI-2 CMOS Image Sensor is not required.
- Input data width: 8-bit/10-bit
- Maximum input image size: 2880*2880
- Supports data sampling at both rising edge and falling edge
- Supports continuous frames sampling and single frame sampling
- Supports DMA upload stride function
- Supports DMA overflow detection
- Supports downscaling of YUV422 data
- Image cropping
- Data line swap function

Anyka Confidential For SAT Use Only

10.1.3 Block Diagram

Image capture supports both MIPI and DVP modes. The following figure is a schematic diagram of the chip's image capture interface.

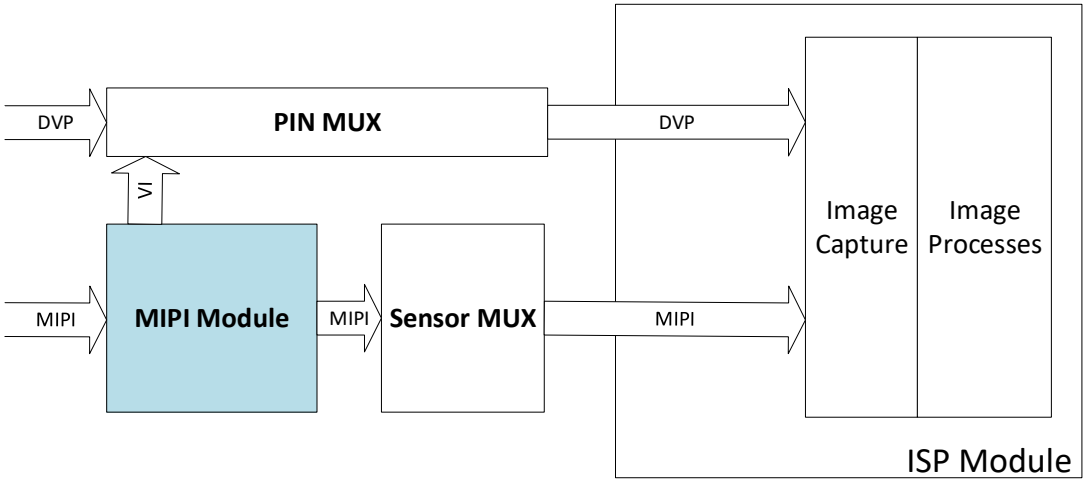

Figure 10-1 Block Diagram of Image Capture

NOTE

1) For the external CMOS image sensor with DVP interface, data will be directly bypassed to the ISP module.
2) For the external CMOS image sensor with MIPI interface, data will be received and parsed by MIPI, then bypassed to ISP module.

10.2 ISP

10.2.1 Overview

The ISP is integrated to improve image quality and to add new features.

10.2.2 Features

Features of ISP are as follows:

- Black level correction and digital gain of four independent channels
- Lens brightness correction
- Gamma correction
- Direction-based color interpolation algorithm
- Noise reduction/Blue fringing removal/Green balance
- White balance correction
- Color correction
- color space conversion (RGB to YUV, compatible with BT.601 and BT.709)
- YUV HDR compressing
- YUV saturation enhance
- 3D Noise Reduction/Motion detection/Data compression of the reference frame
- 2D Noise Reduction
- Sharpening/False color suppression
- Luma Transmit Improvement
- Image flipping and image mirroring

10.3 Pre-processor

10.3.1 Overview

The pre-processor of AK3918AV100 series processors support scaling down/up, OSD (timestamp, watermark), privacy mask and rectangle drawing.
The following figure shows the pre-processor block diagram.

Anyka Confidential For SAT Use Only

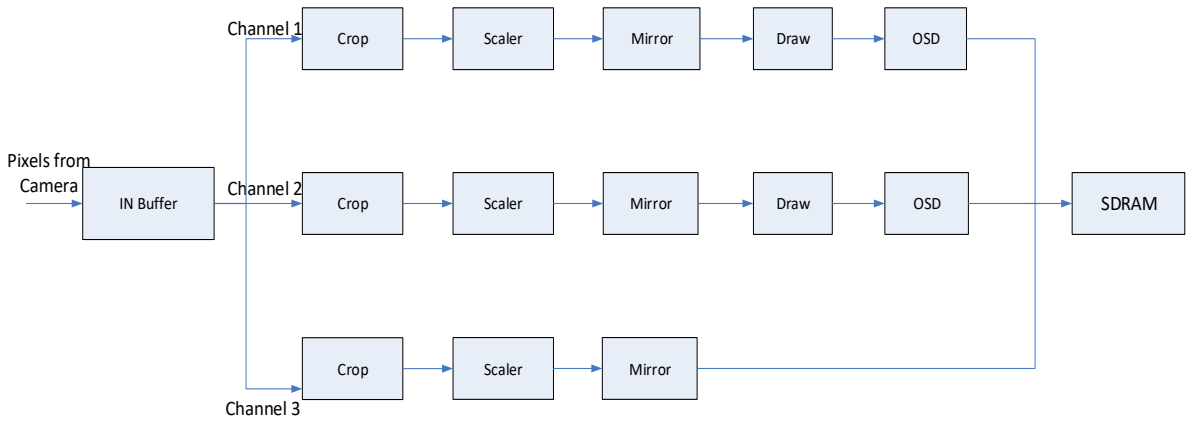

Figure 10-2 Pre-processor Block Diagram

10.3.2 Features

The features of pre-processor are as follows:

- 3 independent channels
- Supports mirroring and flipping of input image
- Input format: YUV420/YUV422/data stream
- Output format: YUV420/YUV420/YUV444/RGB888 packed/semi-planar/full planar
- Resolution and scaling factors
  - Maximum input 2880 x 2880 and minimum input 64 x 64
  - Channel 1: maximum output 3072 x 3072; scaling factor: [0.50, 2.00]
  - Channel 2: maximum output 1280x1024; scaling factor: [0.125, 1.00]
  - Channel 3: maximum output 640 x 480; scaling factor: [0.03125, 1.00]
- Each channel supports 4 frame/slice buffers and stride parameter settings.
- Channel 1 & channel 2 support OSD and rectangle Drawing

10.4 NPU

10.4.1 Overview

Based on CNN algorithm, Neural-network Processing Unit (NPU) is mainly integrated for object detection/tracking and face detection/recognition.

10.4.2 Features

The features of hardware accelerator are as follows:

- Completes one DNN algorithm processing, including convolution operation, the corresponding PReLU function operation and pooling operation(which can disabled), in a single run
- Input image data format: supports signed char INT8 and unsigned char INT8
- Supports zero-padding on the top/bottom/left/right margin of the convolved image data when the convolution kernel is 2*2 or 3*3 DPI
- Supports zero-padding on the bottom/right margin of the pooled image data
- Supports general convolution mode/Depthwise separable convolution mode
- Supports 1*1/ 2*2/3*3 DPI convolution kernel
- Programmable pooling:

Anyka Confidential For SAT Use Only

- bypassing pooling/max-pooling/ mean-pooling
- pooling layer: 2*2/3*3 DPI

- Programmable convolution stride
  - Convolution kernel = 1*1 DPI, convolution stride= 1 DPI
  - Convolution kernel = 2*2/3*3 DPI, convolution stride= 1/2 DPI
  - Pooling layer = 2*2/3*3 DPI, pooling stride= 1/2 DPI

10.5 Video Processor

10.5.1 Overview

The video processor of AK3918AV100 series processors provide hardware acceleration for the compression and decompression of videos and still pictures. It supports MJPEG/H.264/H.265 encoding.

10.5.2 Features

- H.265/H.264 encoding of multiple streams:
  - Supports output resolution up to 3072*2048
  - 2880*1620@15fps+640*480@15fps+320*240@15fps+2880*1620@1fps JPEG
  - 2560*1440@20fps+640*480@20fps+320*240@20fps+2560*1440@1fps JPEG
  - 2304*1296@25fps+640*480@25fps+320*240@25fps+2304*1296@1fps JPEG
  - 1920*1080@30fps+640*480@30fps+320*240@30fps+1920*1080@1fps JPEG
- H.265 encoder
  - Standard: MP Level 1~5
  - Bit rate: VBR, CBR
- H.264 encoder
  - Standard: BP level 1~5/MP Level 1~5/HP level 1~5
  - Bitrate: VBR, CBR
- JPEG encoder
  - Standard: baseline profile (DCT sequential)
  - supports resolution up to 16384*8192

10.6 Encryption

10.6.1 Overview

AES/DES/3DES Encryption module is mainly used to encrypt encoded video code stream. H264/MJPEG Encoding module reads ISP captured data which is saved in the memory, encodes it, and then saves the code stream in the memory; AES/DES/3DES module reads the code stream data by DMA mode, encrypts it and saves the cipher text in the memory in the same way; The cipher text by then can be transmitted to the server by MAC module or network.

10.6.2 Features

Features of AES/DES/3DES module are as follows:

- AES algorithm
  - Conforms to the FIPS-197 standard.
  - Supports 128-bit/192-bit/256-bit key length.
  - Supports working modes like ECB, CBC, 1/8/128-CFB, OFB, and CTR, all of which conforms to NIST Special Publication 800-38a standard.
- DES/3DES algorithm

Anyka Confidential For SAT Use Only

- Compatible with the FIPS46-3 standard.
- Supports 64-bit key length.
- 3DES supports 3 different keys mode and 2 different keys mode.
- Supports working modes like ECB, CBC, 1/8/64-CFB and 1/8/64-OFB, all of which conforms to the FIPS-81 standard.

- ECB, CBC, CFB, OFB working modes support multi-group encryption as well as single group encryption in a single run.
- CTR working mode of AES only supports single group encryption and decryption in a single run.
- Supports operation suspension of the module by force
- Supports time-out interrupt
- Supports interrupt status inquiry, interrupt mask and interrupt clearing
- Supports byte/bit sequence adjustment to grouped input/output data
- Multiplexing multiple encryption channels at different time via software configuration

Anyka Confidential For SAT Use Only

11 Analog

11.1 Overview

The analog control module includes all analog functions for the AK3918AV100 series processors. It mainly consists of:

- One reference voltage generator
- One 16-bit Sigma-Delta ADC
- One 22-bit Sigma-Delta DAC
- Headphone driver
- Microphone differential input
- One 12-bit SAR ADC
- Battery monitor

To make block diagram presentation easier, the digital filters associated with the Sigma-Delta ADC and Sigma-Delta DAC are included.

11.2 Reference Voltage Generator

The reference voltage generator provides reference VREF (1.5V), VCM2 (1.5V) and VCM3 (3.0V) for audio codec and 12-bit SAR ADC.

As illustrated in Figure 11-1, after being regulated by BGR (1.5V), UVDET outputs POR signals for Brown-out detection (3.3V) of the chip and the reference buffer provides a 3.0V reference voltage for SAR ADC. SAR ADC can also acquire reference voltage from HPVDD (3.3V) based on the application needs. After being adjusted by the voltage divider, HPVDD (3.3V) generates a 1.5V reference voltage for VCM2 and VCM 3, which thus provide 1.5V and 3.0V reference voltage for audio modules respectively.

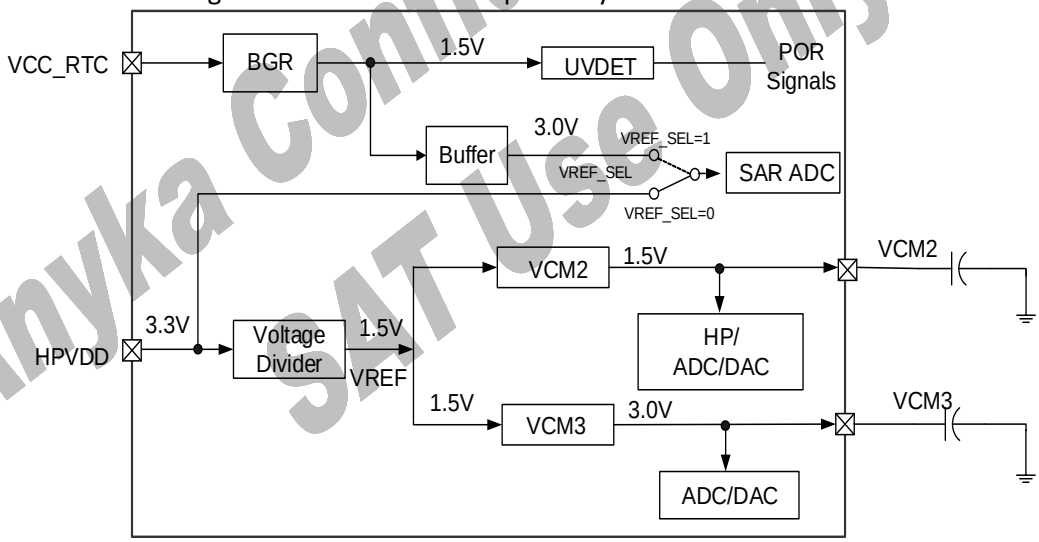

Figure 11-1 Block Diagram of Reference Voltage Generator

11.3 Audio Codec

Audio codec of AK3918AV100 series processors is a high-performance stereo playback/mono recording codec, integrated with headphone, line-in and microphone driver. The block diagram of audio codec of AK3918AV100 series processors is shown in the following figure.

Anyka Confidential For SAT Use Only

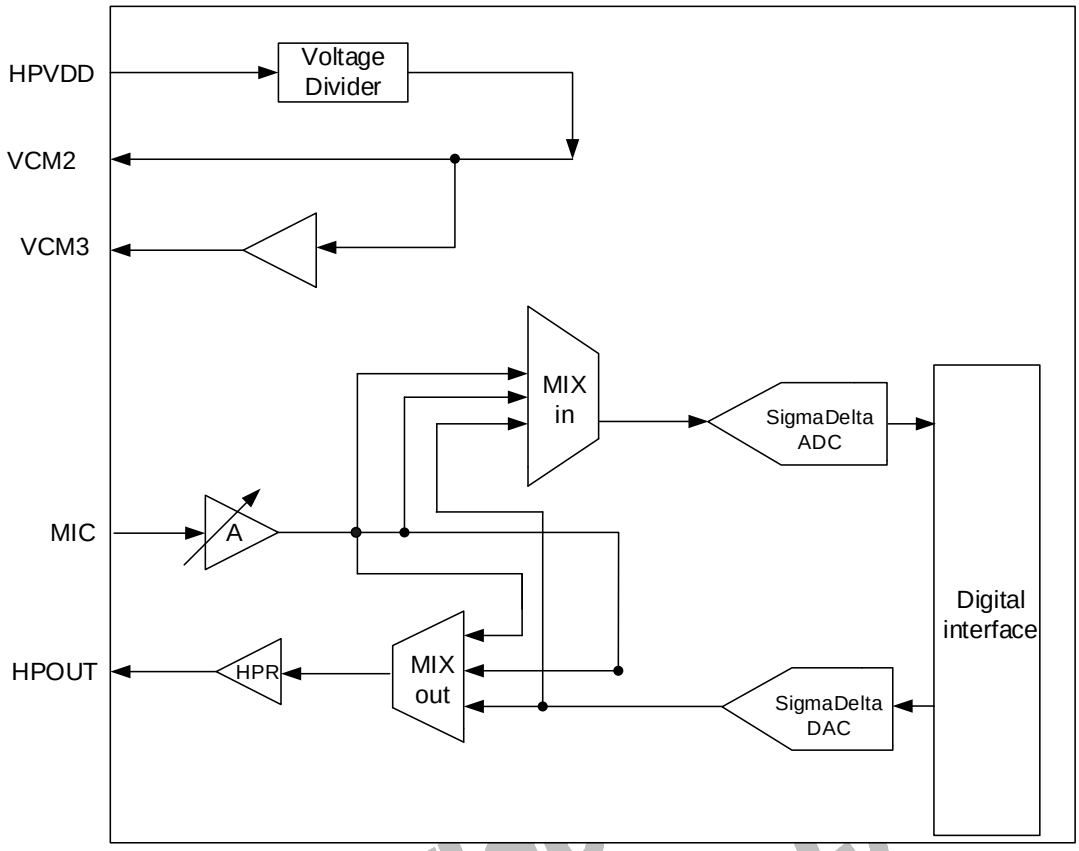

Figure 11-2 Block Diagram of Audio Codec

NOTE

HPVDD, VCM2, VCM3, MIC and HPOUT are external pins. Please refer to Section 3 for details.

11.3.1 Sigma-Delta ADC

Aiming to provide high-performance voice and music mono recording, AK3918AV100 series processors include a 16-bit Sigma-Delta ADC. As illustrated in Figure 11-2, ADC can accept signals from microphone interface or from the output of DAC, the latter of which is used for loopback test of Sigma-Delta ADC.

The high impedance and low capacitance microphone interface is compatible with a wide range of microphones with different dynamics and sensitivities. It contains a programmable gain amplifier (PGA), and a passive filter to prevent high frequencies from folding back into the audio band. VCM3 is used as the bias voltage for microphone. The microphone interface supports differential/single end input.

11.3.2 Sigma-Delta DAC

The AK3918AV100 Series processors contain one 22-bit DAC, which accepts input either from CPU or L2 memory. All of these inputs can be switched off independently. Its output may be sent to headphone driver. The headphone driver is able to drive a 32Ω headphone. As it only supports AC output, a DC blocking capacitor is required in the output of HP.

11.4 SAR ADC

SAR ADC includes three channels, one for battery monitoring, and the other two for analog keypad input or general purpose analog-to-digital conversion. Please note that these three

Anyka Confidential
SAT Use Only

channels cannot be enabled simultaneously, which means that once a certain channel is selected, the other two will be powered down.

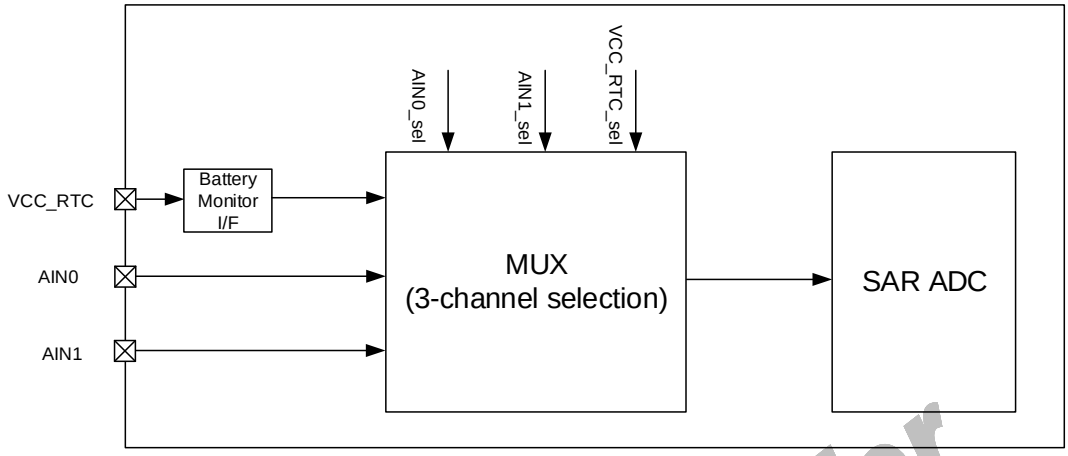

Figure 11-3 Block Diagram of SAR ADC

NOTE

1) VCC_RTC, AIN0 and AIN1 are external pins.
2) VCC_RTC_sel: select battery monitor input; AIN0_sel: select AIN0 signal; AIN1_sel: select AIN1 signal;
3) When VCC_RTC is used for battery monitoring, the voltage of the external batteries should be low than 3.7V.

11.4.1 Battery Monitoring

Battery voltage is monitored by VCC_RTC channel of SAR ADC. And the maximum input voltage of VCC_RTC is 3.63V.

11.4.2 AIN0 Channel and AIN1 Channels

AIN0 and AIN1 channels are used for analog keypad input or general analog-to-digital conversion. It should be noted that once AIN0 or AIN1 channel is enabled, VCC_RTC channel will be disabled. And the voltage of AIN0 and AIN1 ranges from 0V to 3.3V. If the input voltage to be sampled by AIN0 or AIN1 exceeds 3.3V, an external voltage divider is needed.

Anyka Confidential For SAT Use Only

12 Peripherals

12.1 I2S

12.1.1 Overview

I2S is a popular 3-wire serial bus standard protocol for transmission of 2 channel (stereo) Pulse Code Modulation digital data between audio devices, where MSB of each audio sample is sent first.

12.1.2 Features

AK3918AV100 series processors support one I2S interface and its features are as follows:

- Support master and slave mode
- Support up to 32-bit data width
- Support 8KHz ~ 96KHz sampling rate
- Support full-duplex transmission

12.2 TWI

12.2.1 Overview

TWI bus is a two-wire bi-directional serial bus that provides a simple and efficient method of data exchange while minimizing the interconnection between devices.

12.2.2 Features

Features of TWI are as follows:

- Compatible with SCCB protocol
- Supports three TWI ports: TWI0, TWI1 and TWI2
- Supports master and slave mode
- Supports standard mode, fast mode, and fast mode plus

12.3 UART

12.3.1 Overview

UART is an asynchronous serial I/O port and supports full duplex data transmitting and receiving. UART is featured with converting the parallel data from peripheral devices into serial data, and transmit the data into internal bus. The UART module includes three independent asynchronous ports, each of which provides serial communication capability with external devices through an RS232 cable.

12.3.2 Features

Key features of UART module are as follows:

- Three asynchronous ports: UART0, UART1 and UART2
- UART2 supports hardware flow control
- Operating in polling-based mode or interrupt-based mode
- Programmable baud rate, ranging from 95bps to 6.0Mbps
- Data packet of 11 bits: 1 start bit (always “0”), 8 data bits, 1 parity bit (optional), and 1 stop bit (should be “1”)
- Select active voltages of TXD/RXD/CTS/RTS by configuration

Anyka Confidential For SAT Use Only

12.4 SPI1/SPI2 Controller

12.4.1 Overview

AK3918AV100 series processors support SPI1 and SPI2 for general purpose (AK3918AV100P/X processor only support SPI2 Controller). SPI1/SPI2 interface allows fast synchronous serial communication of 8-bit data length. A serial clock is synchronized with the two data lines for shifting and sampling. When SPI1/SPI2 interface is used as master, transmission frequency is configured by setting the clock divider ratio, and a byte transmit/receive operation starts with host writing data into the transmit FIFO. When SPI1/SPI2 interface is used as slave, external bus master supplies the clock.

12.4.2 Features

Features of SPI controller are as follows:

- Compatible with SPI Protocol, Version 2.11
- Supports both master mode and slave mode
- Supports polling mode and interrupt mode
- Supports CPU mode and DMA mode (through L2 memory)
- Supports Transmit Garbage Data Mode (TGDM) and Auto Reject Received Data Mode (ARRM)
- Supports only Standard SPI mode
- Supports four timing modes: mode 0 (CPOL = 0, CPHA = 0) , mode 1 (CPOL = 0, CPHA = 1), mode 2 (CPOL = 1, CPHA = 0), and mode 3 (CPOL = 1, CPHA = 1)
- SPI2 controller supports one or two SPI slave device(s) via #CS signal

The following figure shows the timing diagram of Mode 0 & Mode 3 of SPI1/SPI2.

Anyka Confidential For SAT Use Only

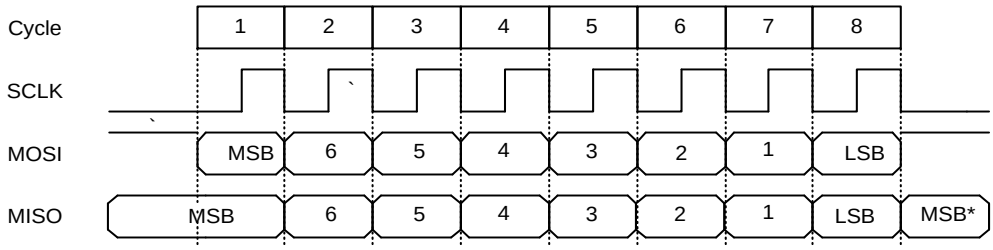

CPOL=0,CPHA=0(Format A)

* MSB of the character just received

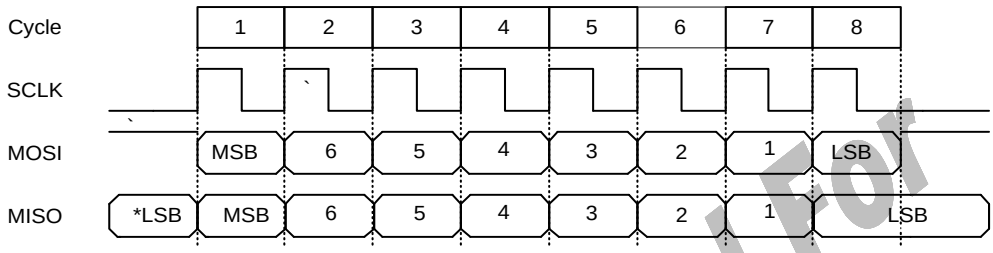

CPOL=0,CPHA=1(Format B)

* LSB of the previously transmitted character

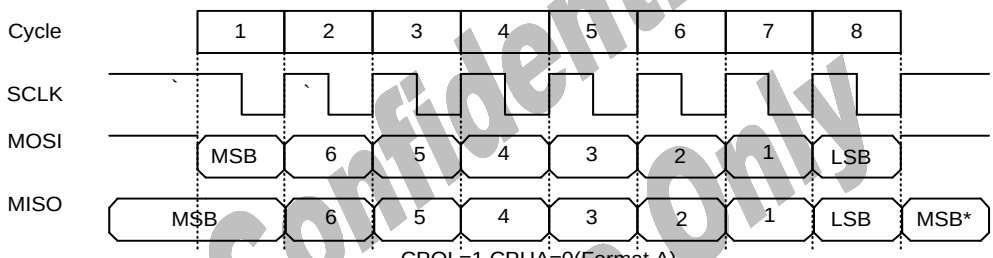

CPOL=1,CPHA=0(Format A)

* MSB of the character just received

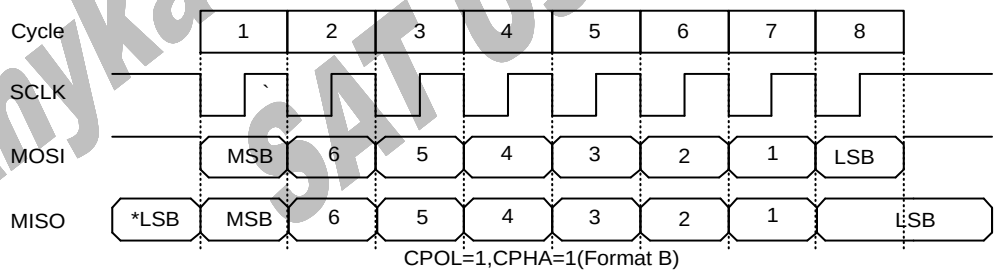

CPOL=1,CPHA=1(Format B)

* LSB of the previously transmitted character

Note:
MOSI: data output in master mode; data input in slave mode
MISO: data input in master mode; data output in slave mode

Figure 12-1 Timing Diagram of Mode 0 & Mode 3 of SPI1/SPI2

Anyka Confidential For SAT Use Only

12.5 USB

12.5.1 Overview

The USB 2.0 HS Host and Slave controller, fully compliant with *USB Specification Version 2.0 (HS)*, provides a 'dual-role' USB controller operating either as the host in point-to-point communications with another USB function or as a function controller for a high-speed/full-speed USB peripheral.

The USB controller provides all the data transmission and receiving in the format of USB packets on the bus. That is, the USB controller interrupts the CPU only when endpoint data have been successfully transferred. When acting as the host for point-to-point communications, the controller additionally maintains a frame counter and automatically schedules SOF, Isochronous, Interrupt and Bulk transfers.

12.5.2 Features

Features of USB 2.0 HS Host and Slave controller are as follows:

- Compliant with USB Specification Version 2.0 (HS)
- Operates as the host in point-to-point communications with another USB function or as a function controller for a USB peripheral
- Supports UTMI+ Level 2 Transceiver Interface
- 6 Transmit/Receive endpoints in addition to Endpoint 0
- 6 DMA channels

The function and FIFO size of each endpoint are as follows:

ENDPOINT	FUNCTION(usually)	FIFO SIZE
Endpoint 0	Control endpoint	64 Bytes
Endpoint 1	Interrupt/Bulk/Isochronous endpoint	512 Bytes
Endpoint 2	Interrupt/Bulk/Isochronous endpoint	512 Bytes
Endpoint 3	Interrupt/Bulk/Isochronous endpoint	512 Bytes
Endpoint 4	Interrupt/Bulk/Isochronous endpoint	2048 Bytes
Endpoint 5	Interrupt/Bulk/Isochronous endpoint	512 Bytes
Endpoint 6	Interrupt/Bulk/Isochronous endpoint	512 Bytes

In addition to endpoint 0, other endpoints can be individually configured by software to handle either Bulk transfers (which also allows them to handle Interrupt transfers) or isochronous transfers.

Anyka Confidential For SAT Use Only

12.5.3 Functional Description

12.5.3.1 Packet

Packet is the basic unit for USB data receiving and transmission. It is composed of SOP, SYNC, packet content and EOP. And a packet includes PID (packet identifier), address, frame number, data and CRC.

There are four kinds of USB packets: token packet, SOF Packet, data packet and handshake packet. Different packets consist of different parts, please refer to the following for more details.

➢ Data packet

There are four kinds of PIDs for options: DATA0, DATA1, DATA2, and DATAM. Depending on the transfer type, the maximum length of data packet is different. The address and frame number can be omitted.

- Token Packet

The token packet is used to initiate a USB transferring.
OUT Token Packet: notify the device that a data packet is about to be sent out.
IN Token Packet: inform the device to return a data packet.
SETUP Token Packet is only used in Control Transfer. Like the OUT token packet, it also informs the device that a data packet is about to be sent out.
Only the DATA0 data packet is used after the SETUP token packet. It can only be sent to the control endpoint of the device and the device must receive it, while the OUT token packet does not have these restrictions.

- SOF Packet

SOF packet is sent at the beginning of each frame in the form of broadcast. All USB full-speed devices and high-speed devices can receive SOF packets. For this kind of packet, PID equals to SOF.

- Handshake packet

ACK: For IN transactions, handshake packet will be initiated by the host; For OUT, SETUP and PING transactions, it will be done by the device.
NAK: In the data phase, for IN transactions, handshake packet will be issued by the device. In the handshake phase, for OUT and PING transactions, it will also be issued by the device; the host never sends NAK packets.

12.5.3.2 Transferring type

There are four types of transfers: bulk transfer, isochronous transfer, interrupt transfer, and control transfers.

- Bulk Transfer: aperiodic

Bulk transfer is suitable for communication of large-capacity data which can occupy any kinds of bandwidth and can tolerate delay, such as USB printers, scanners, mass storage devices, etc.

- Interrupt Transfer: Periodic, low frequency

Interrupt transfer allows limited-latency communication, such as mouse, keyboard, trackball, etc.
An interrupt transmission guarantees the frequency of polling. The interrupt endpoint should report its polling interval in the endpoint descriptor, and the host should ensure that a transfer is scheduled within a range less than this interval.

- Isochronous Transfer: Periodic

Isochronous transfer means continuous transmission and is used to transmit information related to aging, and save time stamp information in the data, such as audio and video equipment.

The isochronous transfer is used in occasions with a large amount of data and high requirements to real-time communication such as audio equipment, video equipment, which are sensitive to data delay. The 100% correctness of audio or video equipment data is

Anyka Confidential For SAT Use Only

not required and a small amount of data errors can be tolerated, mainly to ensure that the data cannot be paused. When the datum is wrong, the operation stops. Therefore, there is no response packet in the isochronous transfer and whether the data is correct or not is confirmed by the CRC check of the data.

➢ Control Transfers: Aperiodic

This kind of transfer is used for command and status transmissions.

Control transfer can be divided into three stages: (1) setup process (2) data process (optional) (3) status process. Every USB device must have a control endpoint that supports control transfers for command and status transfer. The USB host driver will communicate with the control endpoint of the USB device through control transfer to complete the enumeration and configuration of the USB device.

The control transfer is bidirectional and there must be control endpoints with specific endpoint numbers of IN and OUT to complete the control transfer in both directions.

12.6 MMC/SD/SDIO

12.6.1 Overview

AK3918AV100 series processors support three MMC/SD/SDIO interfaces, which are used for external MMC, SD card, and SDIO Wi-Fi.

12.6.2 Features

Features of MMC/SD/SDIO interfaces are as follows:

- Conforms to The Multimedia Card Specification, Version 4.2 , SD Memory Card Specification, Version 2.0, SDIO Specification, Version 2.0
- Maximum reading/writing speed is half of GCLK
- Supports little endian only
- 32-bit local buffer
- Supports single block operation, multiple block operation and stream mode (MMC card only)
- Supports SD card plug-in/off monitoring via pin SD_DATA3/SD_MCLK or certain GPIO port selected by software

12.7 Ethernet

12.7.1 Overview

The Ethernet module, including the Ethernet MAC and a stacked Fast Ethernet PHY transceiver, provides an efficient interface between device and network, and it enables the device to transmit and receive data over the Ethernet.

12.7.2 Features

The module has the following features:

- 10/100Mbps full-duplex/half-duplex mode
- Compliant with IEEE 802.3az-2010 (EEE)/10Base-T IEEE 802.3/ 100Base-TX IEEE 802.3u
- Supports Auto-Negotiation/ Auto-MDIX

Anyka Confidential For SAT Use Only

12.8 GPIO

12.8.1 Overview

AK3918AV100 series processors contain up to 61 GPIOs (GPIO[0:11], GPIO[16:27], GPIO[31:37], , GPIO[42:52], GPIO[55:56], GPIO[58], GPIO[65:71], GPIO[78:79] and GPIO[98:102]). GPIO37& GPIO50& GPIO98 are dedicated GPIOs and the rest are shared with other pins. For more details, please refer to Table 13-1.

12.8.2 Features

GPIO provides the following features:

- Configurable input or output status
- Supports edge-triggered or level-triggered interrupt
- Programmable edge-triggered interrupt (HIGH or LOW active)
- Programmable level-triggered interrupt on falling edge or rising edge or both

12.8.3 Functional Description

12.8.3.1 Interrupt Function

The GPIO module supports interrupt function. Programmer can enable/disable the interrupt function, configure interrupt-triggered types and interrupts polarity, including level-triggered (HIGH or LOW active) and edge-triggered (rising edge or falling edge or double edge) interrupts.

12.8.3.2 Wakeup Function

The AK3918AV100 series processors contain 45 GPIOs supporting wakeup function. Programmer can enable/disable the wakeup function, configure polarity of wakeup IO ports, check and clear the wakeup status. For more detailed information, please refer to Section 8.6.

Anyka Confidential For SAT Use Only

13 Device Characteristics

Table 13-1 shows the differences of AK3918AV100 series devices, in which the sign “ √ ” means supporting and “ - “ means not supporting.

Table 13-1 Characteristics of the AK3918AV100 Series Devices

Items			AK3918AV100N	AK3918AV100P	AK3918AV100X
CPU			ARM926EJ-S		
Storage	External	SPI NOR Flash	√	√	√
		SPI NAND Flash	√	√	√
	Internal	DDR2 SDRAM	512Mbit (4 banks x 8M words x 16 bits)	512Mbit (4 banks x 8M words x 16 bits)	1Gbit (8 banks x 8M words x 16 bits)
System Control	Bootstrap	SPI NOR Flash Boot	√	√	√
		SPI NAND Flash Boot	√	√	√
		USB Mass Storage Boot	√	√	√
		UART Boot	√	√	√
		eMMC/SD/SDIO Boot	√	√	√
	Timer		10	10	10
	PWM		5 (PWM[0:4])	4 (PWM[0:3])	4 (PWM[0:3])
	RTC		√	-	-

Anyka Confidential For SAT Use Only

Items			AK3918AV100N	AK3918AV100P	AK3918AV100X
	Encryption	Hardware AES, DES and 3DES engine	√	√	√
	Tsensor		√	√	√
	Camera Interface	DVP interface (BT.601/BT.656/BT.1120)	√	√	√
		MIPI interface	1/2-data lane	1/2-data lane	1/2-data lane
	ISP		√	√	√
	Pre-processor		√	√	√
	Video Processor (H.265/H.264/JPEG encoder)		√	√	√
	NPU		√	√	√
Analog	SAR ADC		3 channels (AIN0, AIN1,VCC_RTC)	2 channels (AIN1,VCC_RTC)	2 channels (AIN1,VCC_RTC)
	Sigma-Delta ADC		1 (16bits)	1 (16bits)	1 (16bits)
	Sigma-Delta DAC		1 (22bits)	1 (22bits)	1 (22bits)
Peripherals	I2S		1	1	1
	TWI		3	3	3
	UART		3 (UART2 supports hardware	3 (UART2 supports hardware	3 (UART2 supports hardware

Anyka Confidential For SAT Use Only

Items			AK3918AV100N	AK3918AV100P	AK3918AV100X
			flow control)	flow control)	flow control)
	Fast SPI0		1	1	1
	SPI		2	1	1
	USB2.0 HS Host & Slave		1	1	1
	MMC/SD/SDIO		3	3	3
	Ethernet	MAC	√	√	√
		PHY	-	√	√
	GPIO		59 (GPIO[0:11], GPIO[16:27], GPIO[31:37], GPIO[42:52], GPIO[55:56], GPIO[58], GPIO[65:71], GPIO[78:79], GPIO[98:102])	51 (GPIO[2:11], GPIO[17:23], GPIO[31:37], GPIO[42:52], GPIO[55:56], GPIO[58], GPIO[65:70], GPIO[78:79], GPIO[98:102])	51 (GPIO[2:11], GPIO[17:23], GPIO[31:37], GPIO[42:52], GPIO[55:56], GPIO[58], GPIO[65:70], GPIO[78:79], GPIO[98:102])
Power	Core Voltage (V)		0.8		
	IO Voltage (V)		3.3		
	DDR2 Voltage (V)		1.5		

Anyka Confidential For SAT Use Only

Items		AK3918AV100N	AK3918AV100P	AK3918AV100X
	CMOS Image Sensor (V)	1.8/3.3		
Package	Operating Temperature (℃)	-20 ~ 70		
	Package	88-pin QFN 9.00mm x 9.00mm x 0.90mm 0.35mm pitch		

Anyka Confidential For SAT Use Only